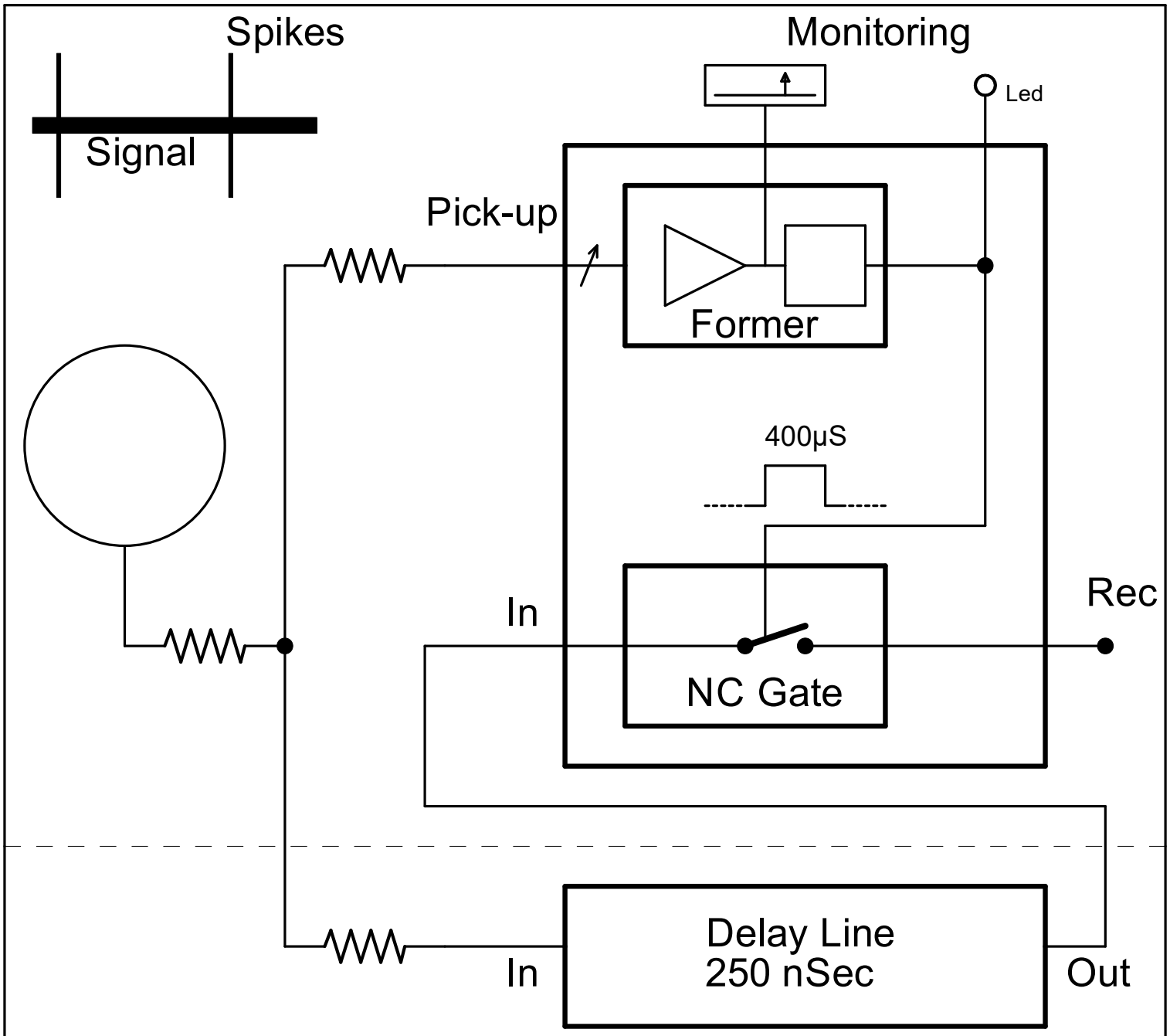

Trigger delay from spike: 50 nS

Monostable length: 400 µS

Receiver delay from spike: 250 nS