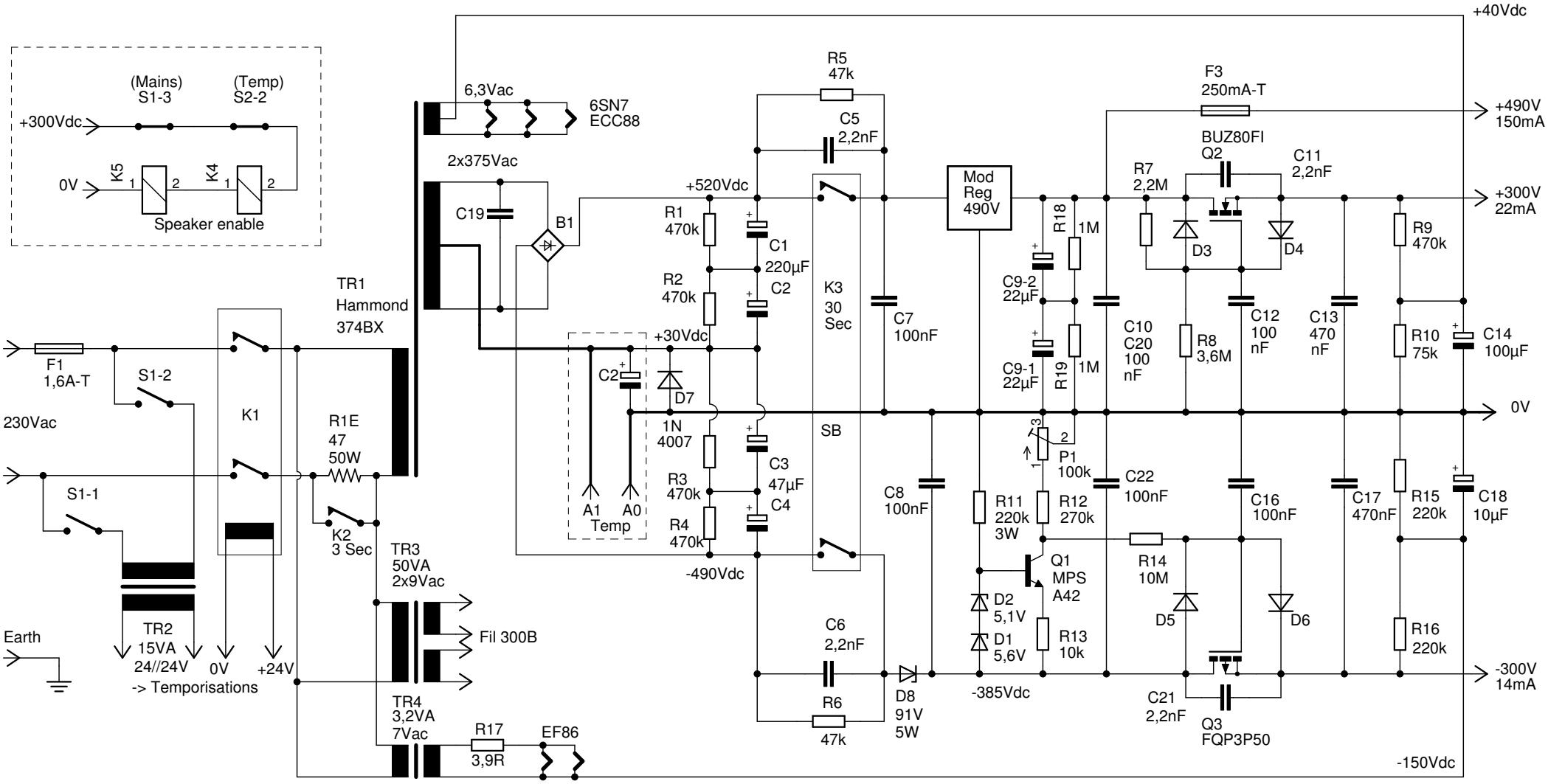
(Mains)
S1-3
(Temp)
S2-2
+300Vdc
0V
K5
K4
Speaker enable
6,3Vac
6SN7
ECC88
2x375Vac
C19
B1
TR1
Hammond
374BX
F1
1,6A-T
S1-2
230Vac
S1-1
K1
R1E
47
50W
K2
3 Sec
TR2
15VA
24//24V
-> Temporisations
0V
+24V
Earth
TR3
50VA
2x9Vac
Fil 300B
TR4
3,2VA
7Vac
R17
3,9R
EF86
+520Vdc
R1
470k
R2
470k
+30Vdc
C2
D7
1N
4007
R3
470k
R4
470k
-490Vdc
A1
A0
Temp
C1
220µF
C2
C3
47µF
C4
R5
47k
C5
2,2nF
K3
30
Sec
SB
C7
100nF
C8
100nF
C6
2,2nF
R6
47k
D8
91V
5W
Mod
Reg
490V
R18
1M
R19
1M
C9-2
22µF
C9-1
22µF
P1
100k
R11
220k
3W
R12
270k
D2
5,1V
D1
5,6V
R13
10k
Q1
MPS
A42
-385Vdc
+40Vdc
F3
250mA-T
+490V
150mA
BUZ80FI
Q2
R7
2,2M
C11
2,2nF
+300V
22mA
D3
D4
C10
C20
100
nF
R8
3,6M
C12
100
nF
C13
470
nF
R9
470k
R10
75k
C14
100µF
0V
C22
100nF
C16
100nF
C17
470nF
R15
220k
C18
10µF
R14
10M
D5
D6
R16
220k
-300V
14mA
C21
2,2nF
Q3
FQP3P50
-150Vdc