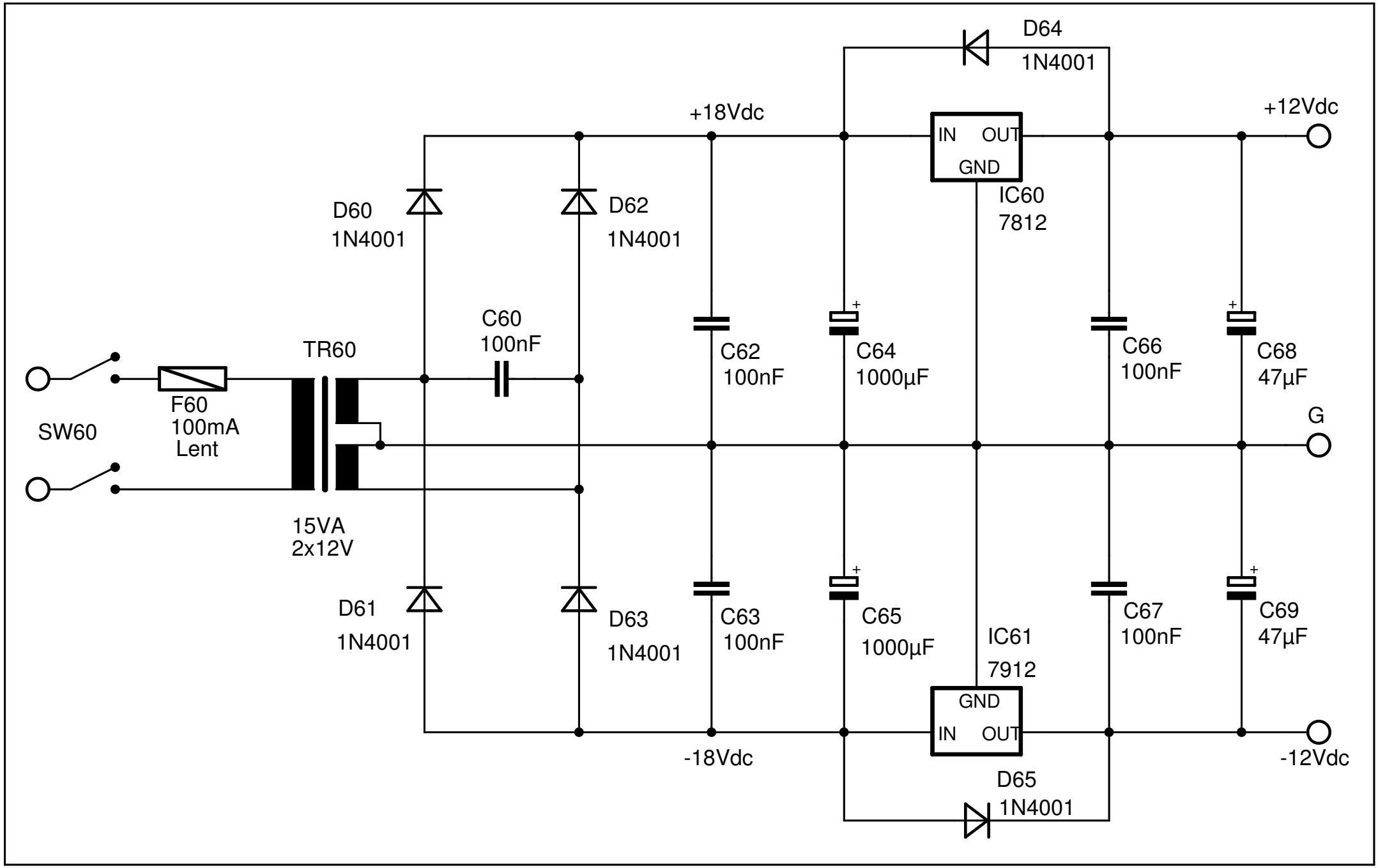
D64
1N4001
+18Vdc
+12Vdc
IN
OUT
GND
IC60
7812
D60
1N4001
D62
1N4001
C60
100nF
TR60
C62
100nF
C64
1000µF
C66
100nF
C68
47µF
F60
100mA
Lent
SW60
G
15VA
2x12V
D61
1N4001
D63
1N4001
C63
100nF
C65
1000µF
IC61
7912
C67
100nF
C69
47µF
GND
IN
OUT
-18Vdc
-12Vdc
D65
1N4001