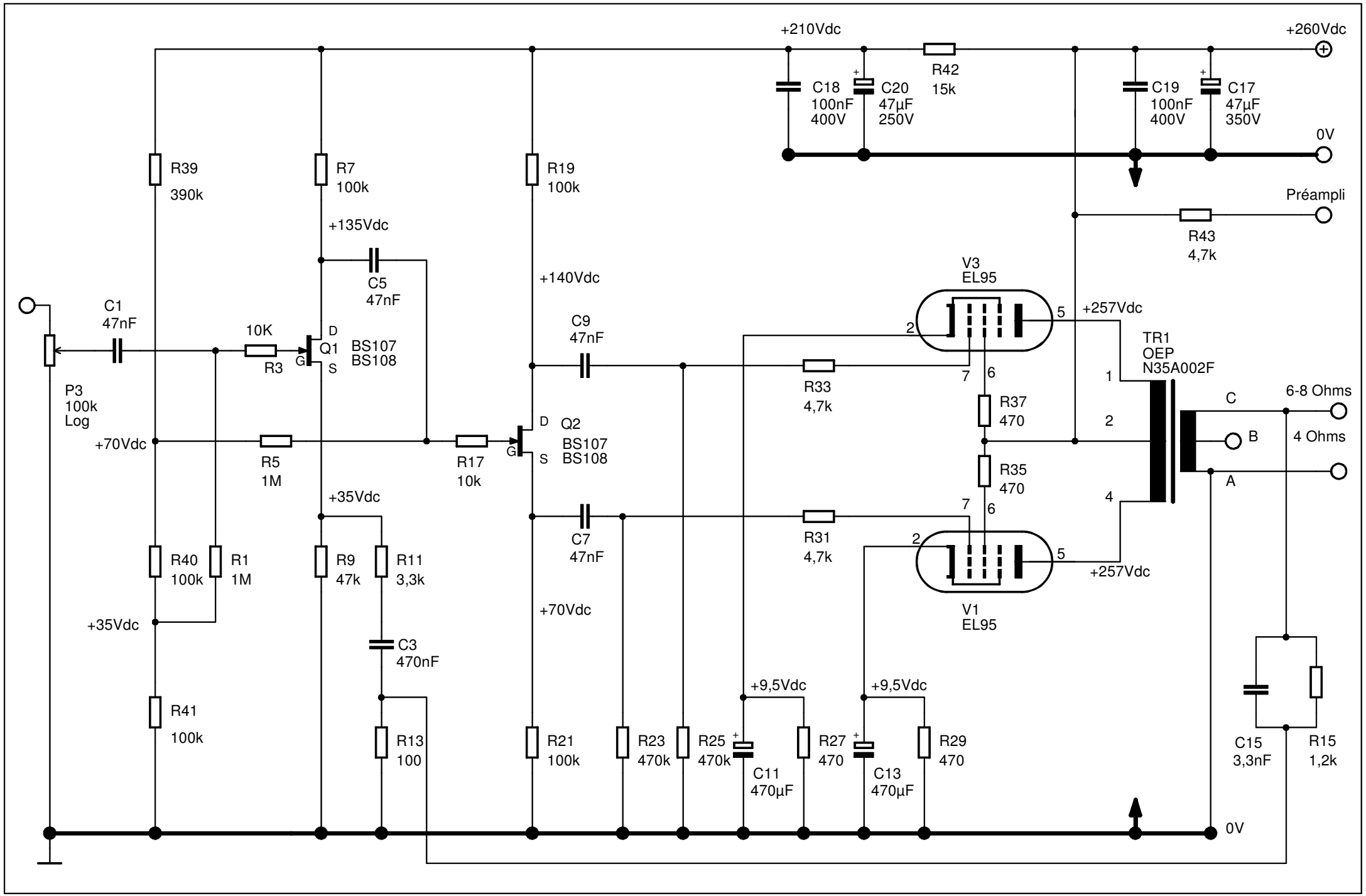

12/07/2012 13:50:23 f=1.25 E:_Program Files Bis\CAD\EAGLE-4.13\projects\A3 EL95 Shelf\A3 EL95 ed4.sch (Sheet: 1/1)