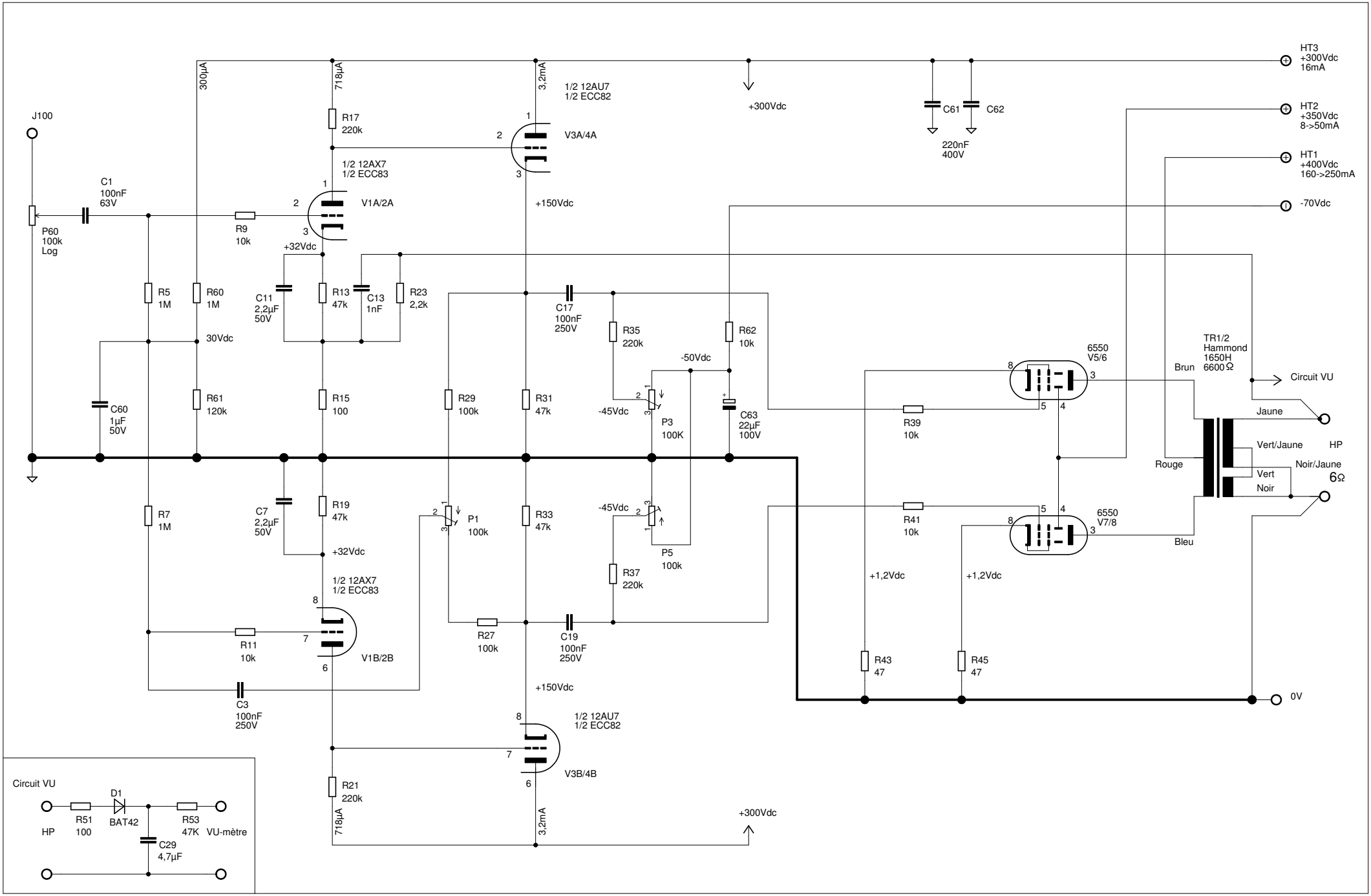
J100
P60
100k
Log
C1
100nF
63V
R5
1M
R60
1M
R61
120k
C60
1µF
50V
R7
1M
300µA
30Vdc
R9
10k
C11
2,2µF
50V
C7
2,2µF
50V
R11
10k
C3
100nF
250V
718µA
R17
220k
1/2 12AX7
1/2 ECC83
V1A/2A
+32Vdc
R13
47k
C13
1nF
R23
2,2k
R15
100
R19
47k
+32Vdc
1/2 12AX7
1/2 ECC83
V1B/2B
R21
220k
718µA
3,2mA
1/2 12AU7
1/2 ECC82
V3A/4A
+150Vdc
C17
100nF
250V
R35
220k
-45Vdc
P3
100K
R29
100k
P1
100k
R27
100k
R31
47k
R33
47k
-45Vdc
P5
100k
R37
220k
C19
100nF
250V
+150Vdc
1/2 12AU7
1/2 ECC82
V3B/4B
3,2mA
+300Vdc
+300Vdc
C61
C62
220nF
400V
R62
10k
-50Vdc
C63
22µF
100V
6550
V5/6
R39
10k
R41
10k
6550
V7/8
+1,2Vdc
+1,2Vdc
R43
47
R45
47
TR1/2
Hammond
1650H
6600Ω
Brun
Rouge
Bleu
Circuit VU
Jaune
Vert/Jaune
Vert
Noir
Noir/Jaune
HP
6Ω
0V
HT3
+300Vdc
16mA
HT2
+350Vdc
8->50mA
HT1
+400Vdc
160->250mA
-70Vdc
Circuit VU
HP
R51
100
D1
BAT42
R53
47K
VU-mètre
C29
4,7µF