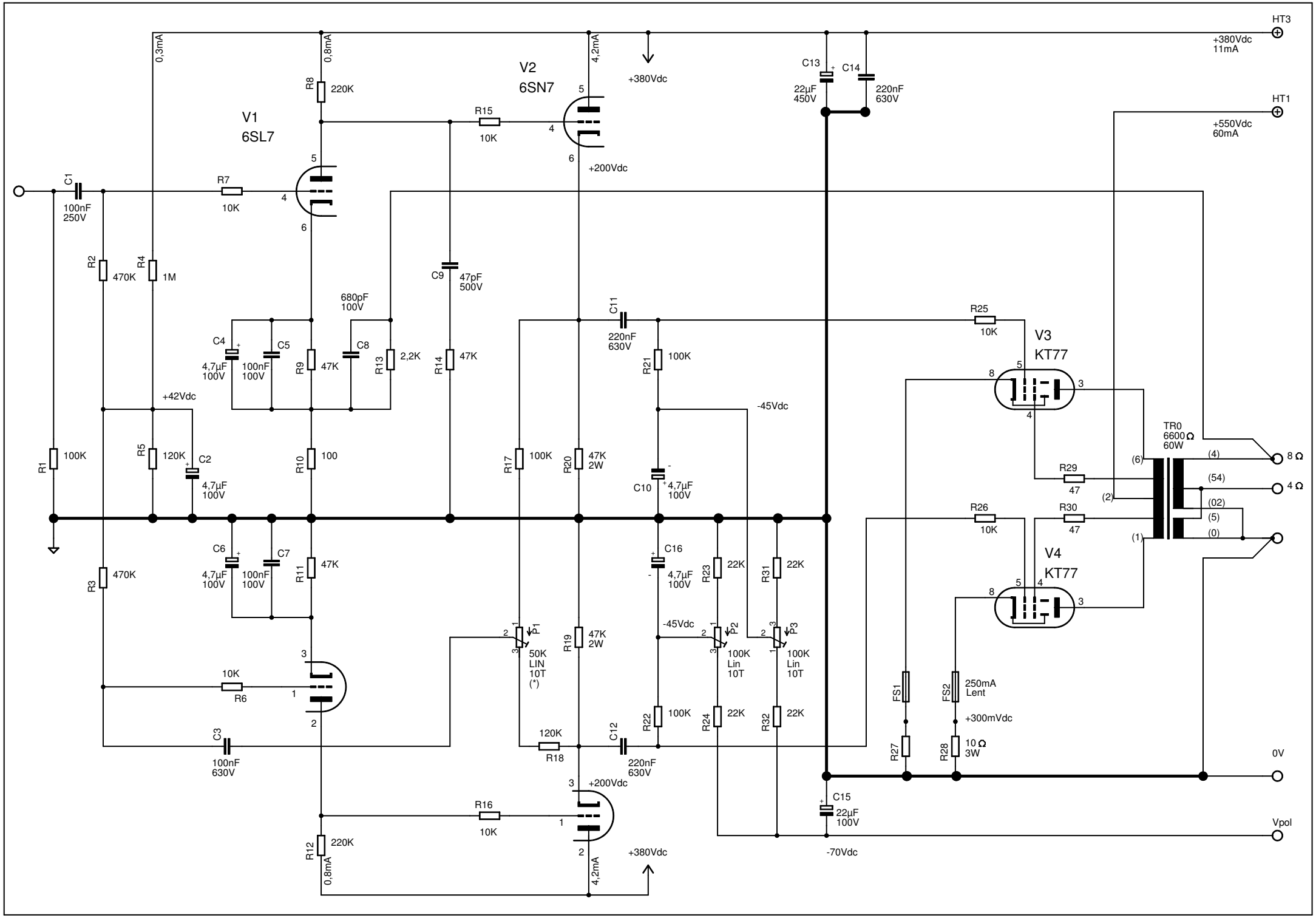

28/08/2014 20:23:43 f=0.85 E:__Program Files Bis\CAD\EAGLE-4.13\projects\A60\A60 Amplificateur ed3.sch (Sheet: 1/1)