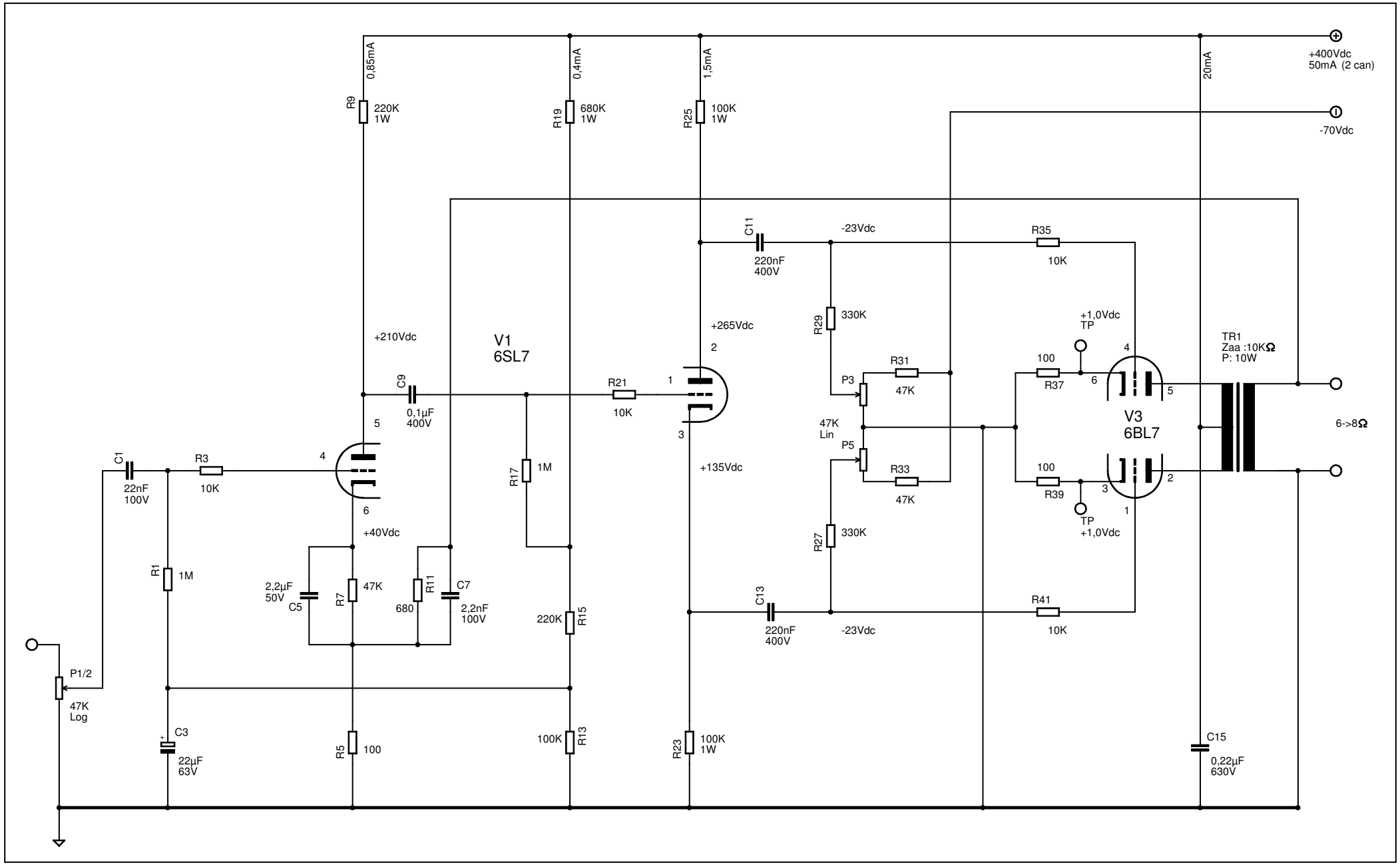

24/11/2010 22:59:14 f=0.85 E:_Program Files Bis\CAD\EAGLE-4.13\projects\A Retro 6BL7\A retro 6BL7 ed5.sch (Sheet: 1/1)