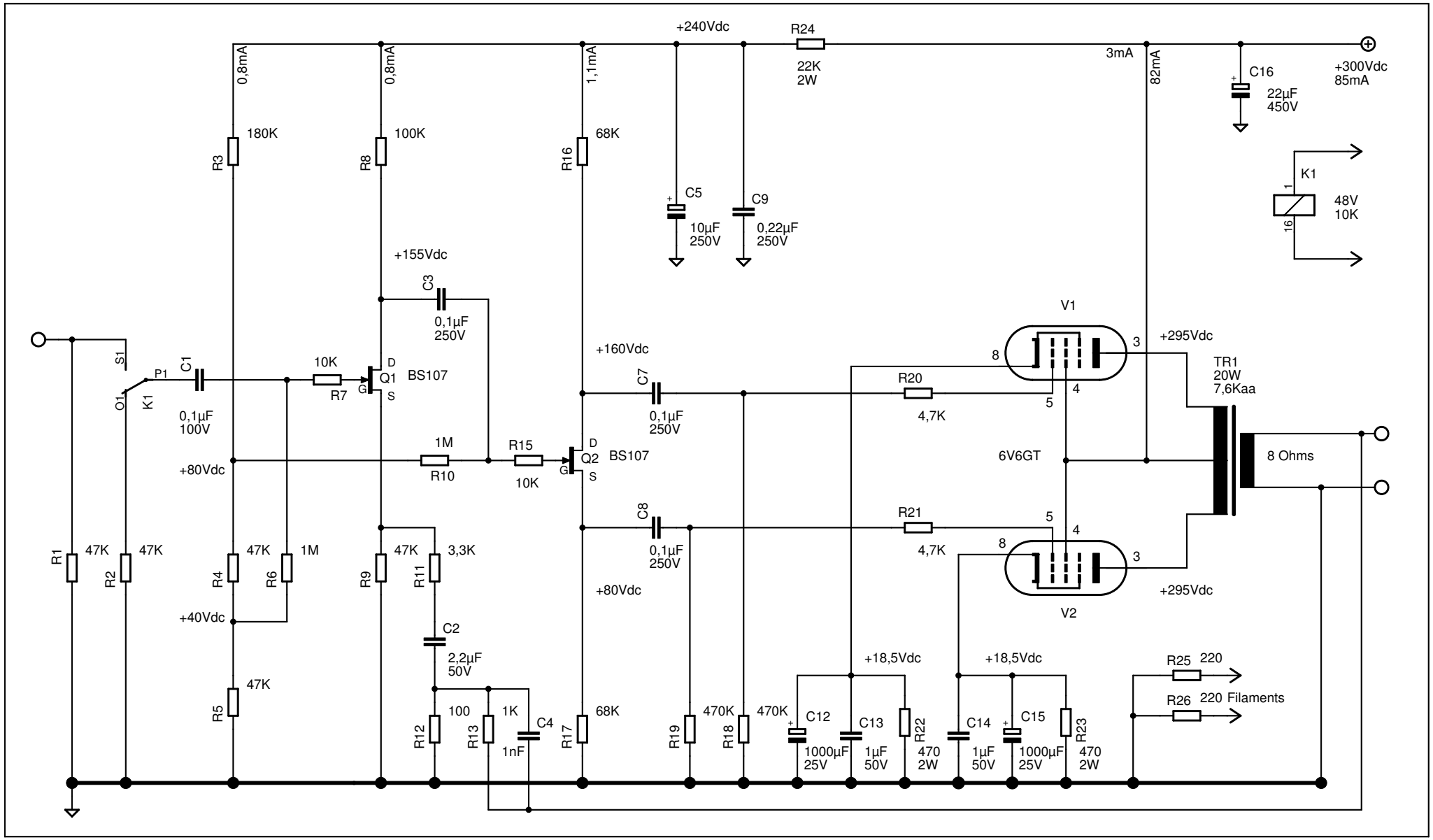
+240Vdc
R24
22K
2W
3mA
82mA
C16
22µF
450V
+300Vdc
85mA
0,8mA
0,8mA
1,1mA
180K
R3
100K
R8
68K
R16
C5
10µF
250V
C9
0,22µF
250V
K1
1
16
48V
10K
+155Vdc
C3
0,1µF
250V
V1
+295Vdc
TR1
20W
7,6Kaa
8 Ohms
S1
P1
C1
0,1µF
100V
10K
R7
Q1
BS107
D
G
S
+160Vdc
C7
0,1µF
250V
R20
4,7K
6V6GT
+80Vdc
1M
R10
R15
10K
Q2
BS107
C8
0,1µF
250V
R21
4,7K
V2
+295Vdc
R1
47K
R2
47K
R4
47K
R6
1M
R9
47K
R11
3,3K
+40Vdc
C2
2,2µF
50V
R5
47K
R12
100
R13
1K
C4
1nF
R17
68K
R19
470K
R18
470K
+18,5Vdc
C12
1000µF
25V
C13
1µF
50V
R22
470
2W
+18,5Vdc
C14
1µF
50V
C15
1000µF
25V
R23
470
2W
R25
220
R26
220 Filaments