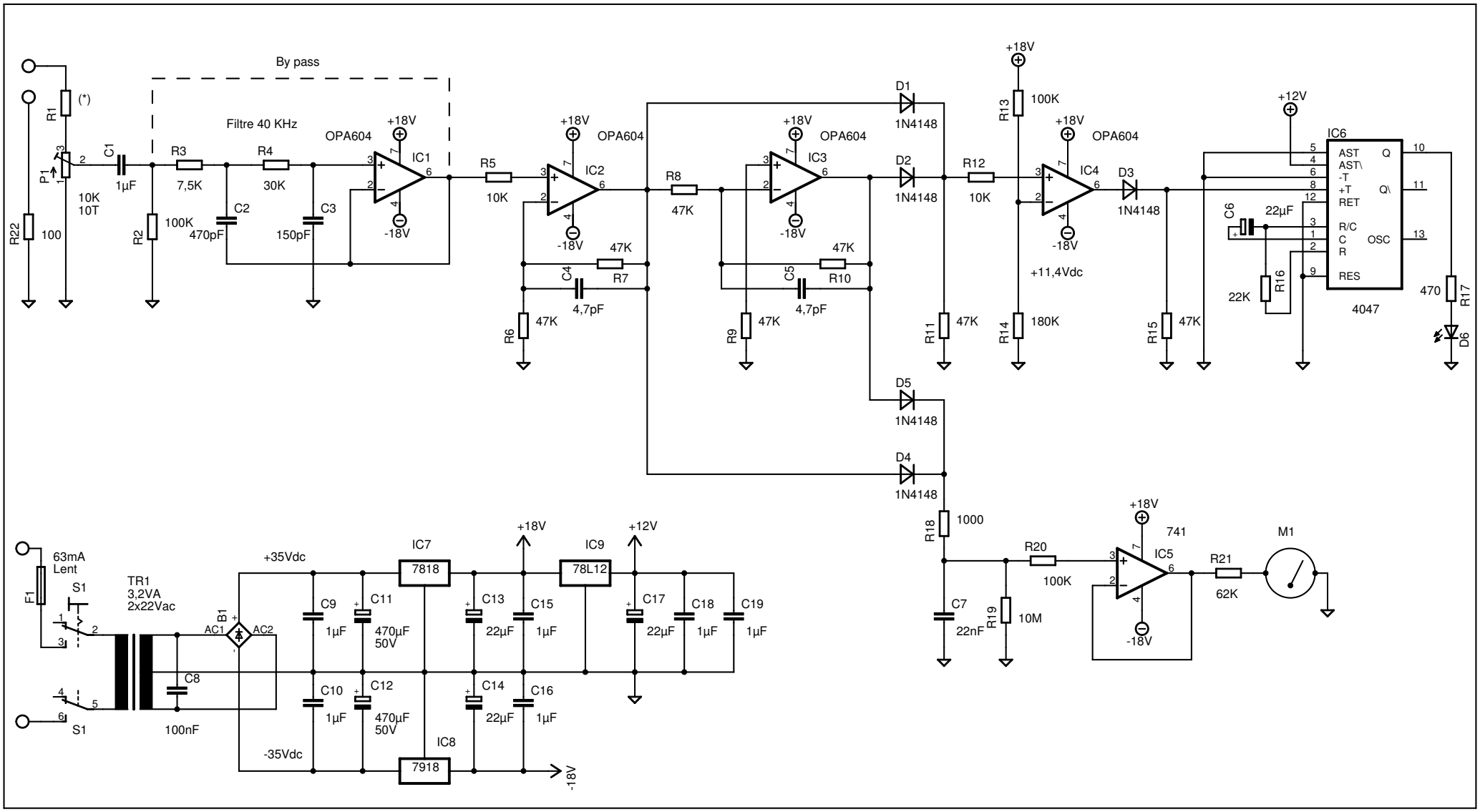
By pass
Filtre 40 KHz
(*)
R1
P1
10K
10T
R22
100
C1
1µF
R2
100K
R3
7,5K
R4
30K
C2
470pF
C3
150pF
OPA604
IC1
+18V
-18V
R5
10K
IC2
R6
47K
R7
47K
C4
4,7pF
R8
47K
IC3
R9
47K
R10
47K
C5
4,7pF
D1
1N4148
D2
1N4148
D3
1N4148
D4
1N4148
D5
1N4148
R11
47K
R12
10K
R13
100K
R14
180K
IC4
+11,4Vdc
R15
47K
+12V
IC6
AST
AST\
-T
+T
RET
R/C
C
R
RES
Q
Q\
OSC
4047
C6
22µF
R16
22K
R17
470
D6
R18
1000
C7
22nF
R19
10M
R20
100K
IC5
741
R21
62K
M1
63mA
Lent
F1
S1
TR1
3,2VA
2x22Vac
C8
100nF
B1
AC1
AC2
+35Vdc
-35Vdc
IC7
7818
IC8
7918
IC9
78L12
C9
1µF
C10
1µF
C11
470µF
50V
C12
470µF
50V
C13
22µF
C14
22µF
C15
1µF
C16
1µF
C17
22µF
C18
1µF
C19
1µF