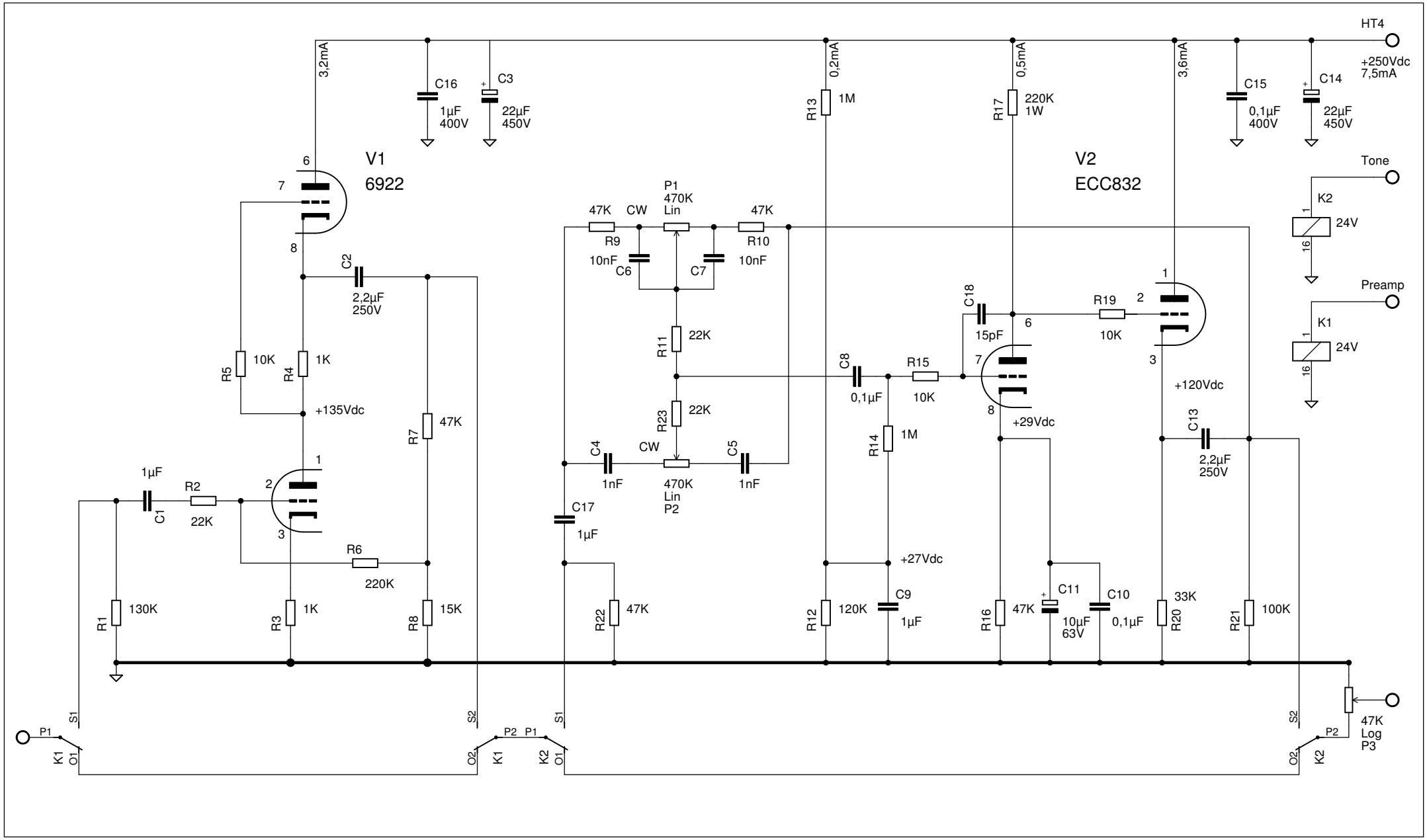
HT4
+250Vdc
7,5mA
3,2mA
C16
1µF
400V
C3
22µF
450V
0,2mA
R13
1M
0,5mA
R17
220K
1W
3,6mA
C15
0,1µF
400V
C14
22µF
450V
V1
6922
V2
ECC832
Tone
K2
24V
Preamp
K1
24V
P1
470K
Lin
47K
CW
R9
R10
10nF
C6
C7
C2
2,2µF
250V
R11
22K
R23
22K
C18
15pF
R19
10K
C8
0,1µF
R15
10K
R5
10K
R4
1K
+135Vdc
R7
47K
+120Vdc
+29Vdc
C13
2,2µF
250V
C4
1nF
CW
470K
Lin
P2
C5
1nF
R14
1M
1µF
R2
22K
C1
C17
1µF
R6
220K
+27Vdc
R1
130K
R3
1K
R8
15K
R22
47K
R12
120K
C9
1µF
R16
47K
C11
10µF
63V
C10
0,1µF
R20
33K
R21
100K
S1
S2
P1
K1
O1
O2
P2
K2
47K
Log
P3