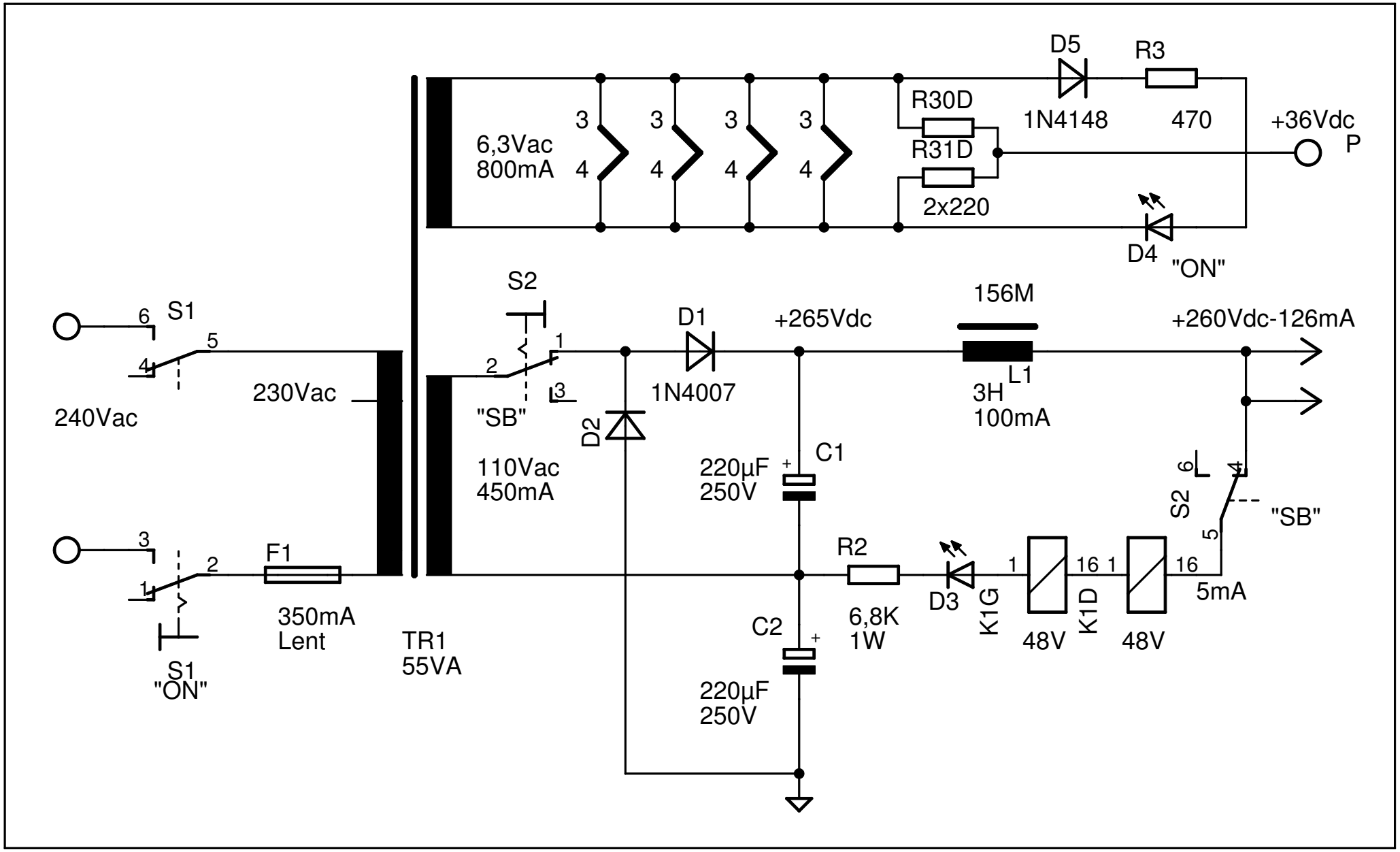
D5
R3
R30D
1N4148
470
+36Vdc
P
6,3Vac
800mA
R31D
2x220
D4
"ON"
S2
156M
S1
D1
+265Vdc
+260Vdc-126mA
230Vac
1N4007
L1
3H
100mA
240Vac
"SB"
D2
C1
220µF
250V
S2
"SB"
110Vac
450mA
R2
F1
D3
K1G
K1D
5mA
350mA
Lent
6,8K
1W
48V
48V
TR1
55VA
C2
S1
"ON"
220µF
250V