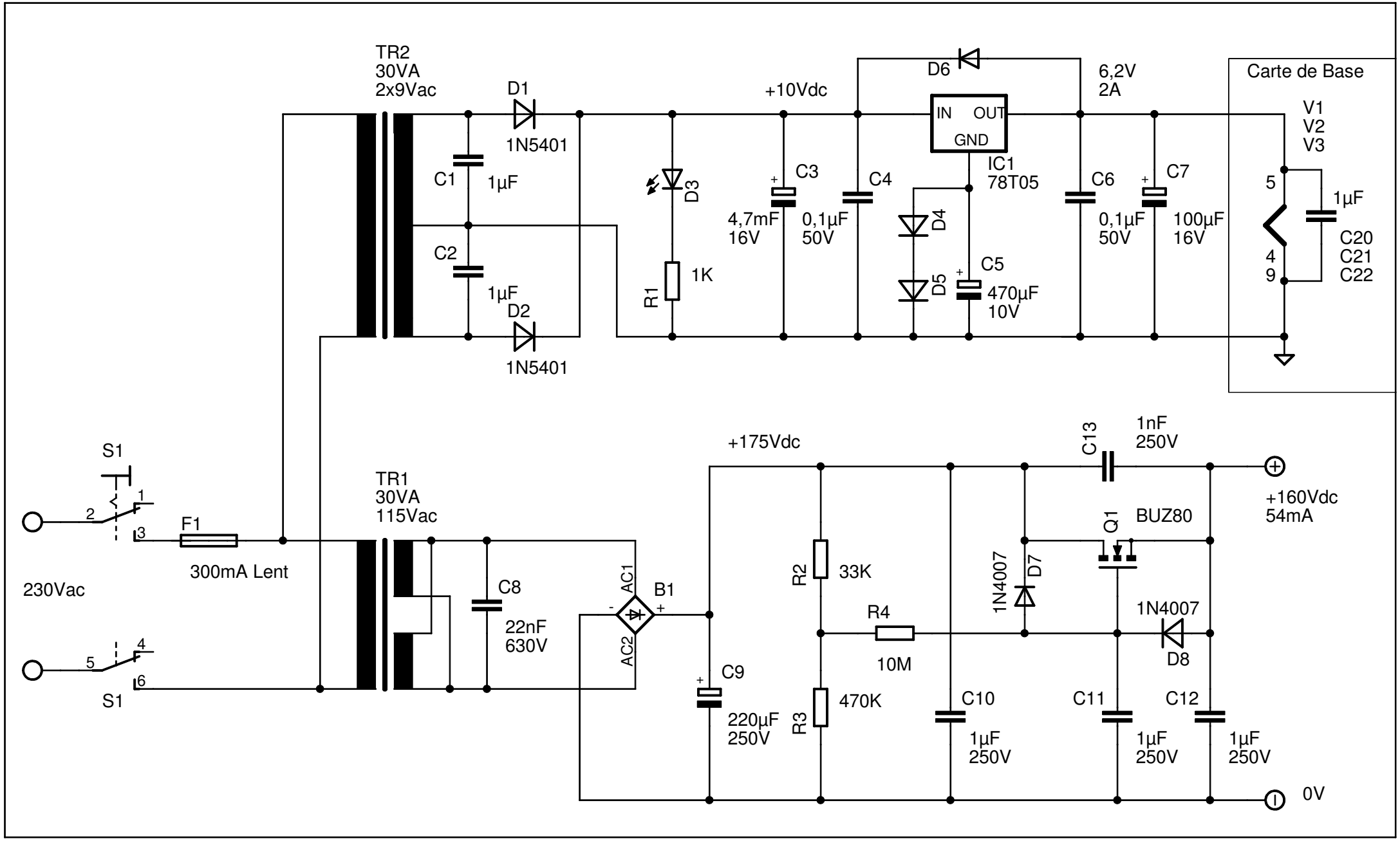

06/09/2010 09:28:01 f=1.50 E:_Program Files Bis\CAD\EAGLE-4.13\projects\Filtre\Filtre Alim ed3.sch (Sheet: 1/1)