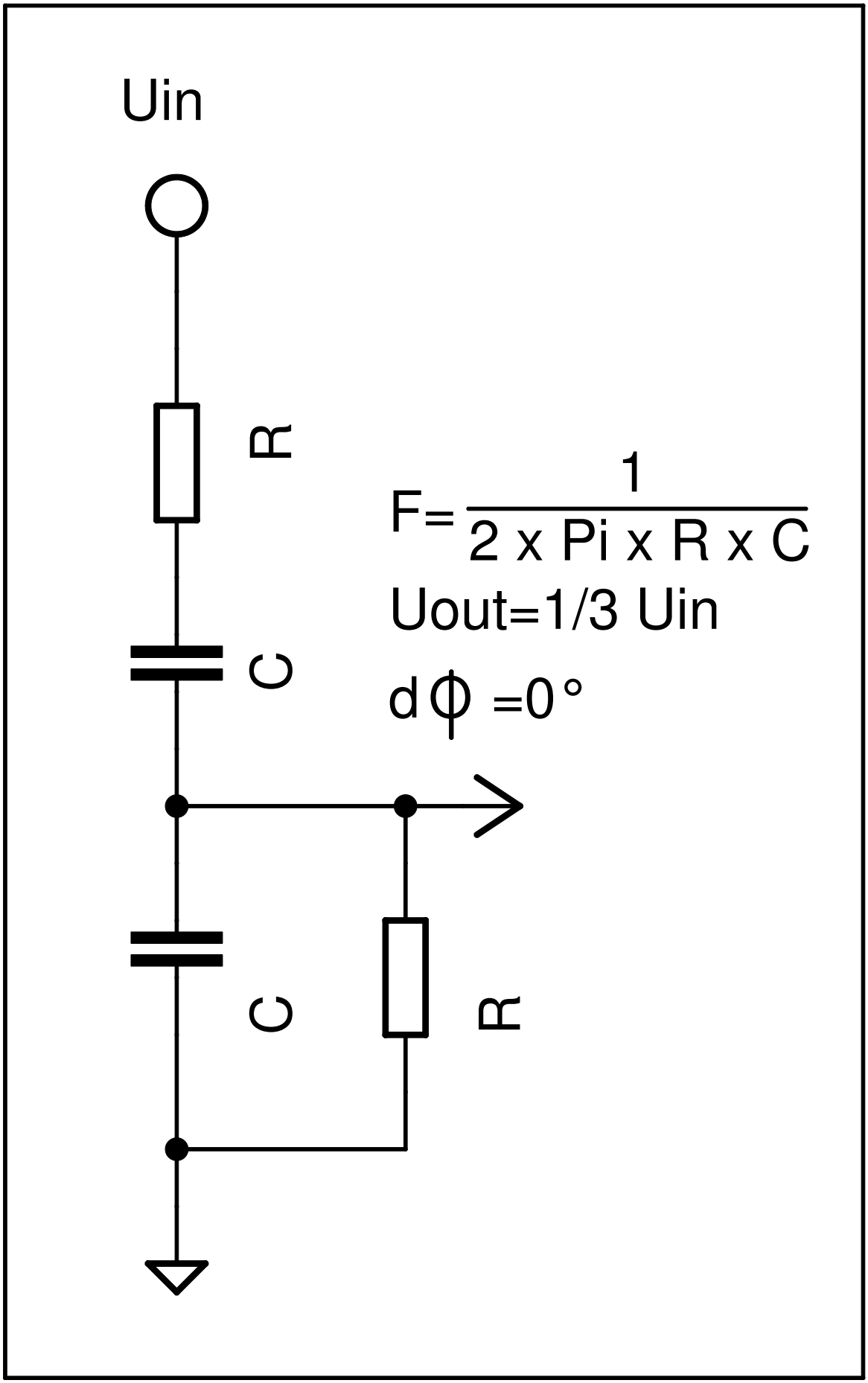
Uin
R
C
C
R
F= 1 / 2 x Pi x R x C
Uout=1/3 Uin
dϕ =0°