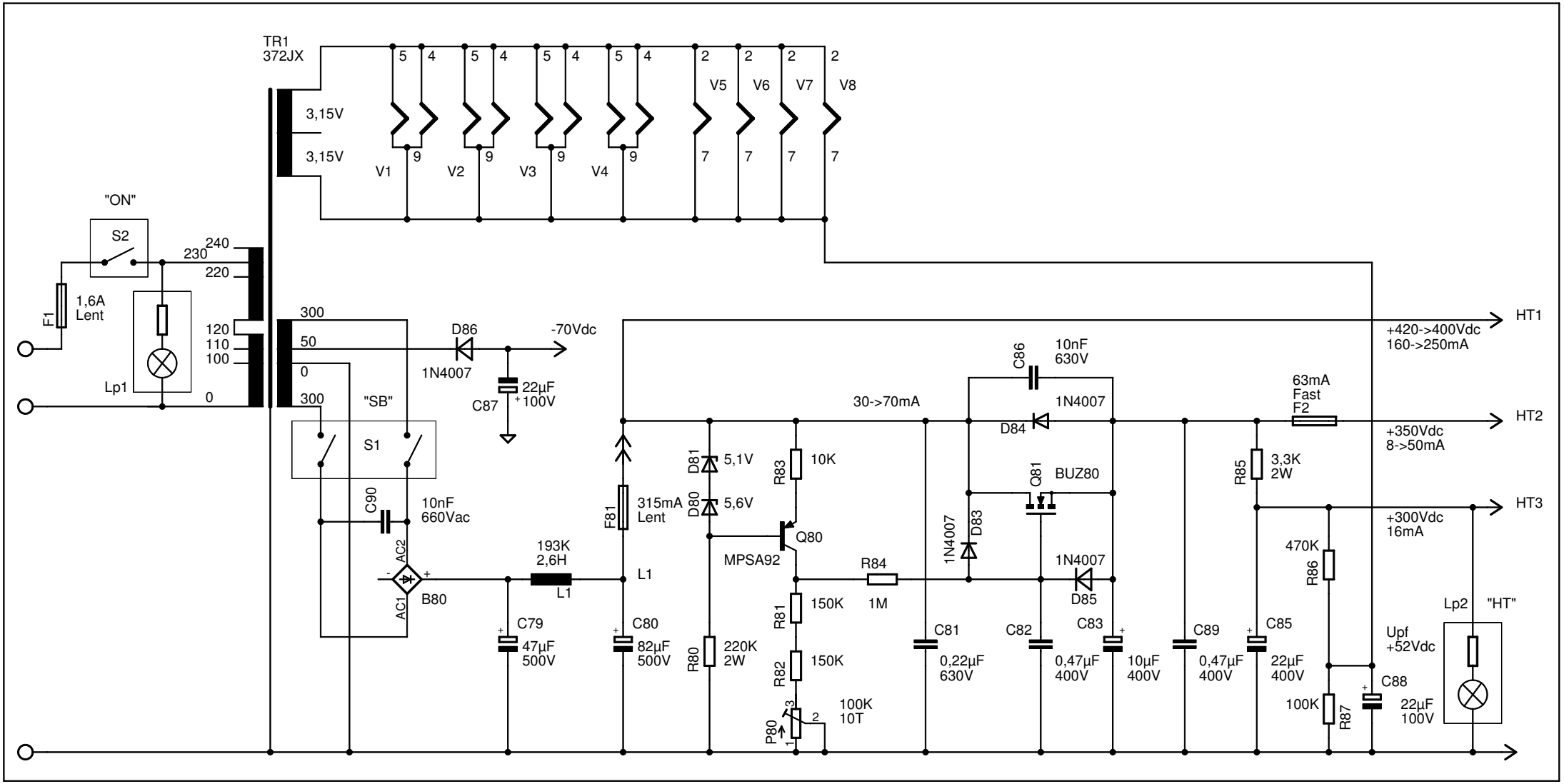

16/03/2012 08:07:33 f=1.05 F:_Program Files Bis\CAD\EAGLE-4.13\projects\A24 7591A\A24 Alimentation Ed13.sch (Sheet: 1/1)