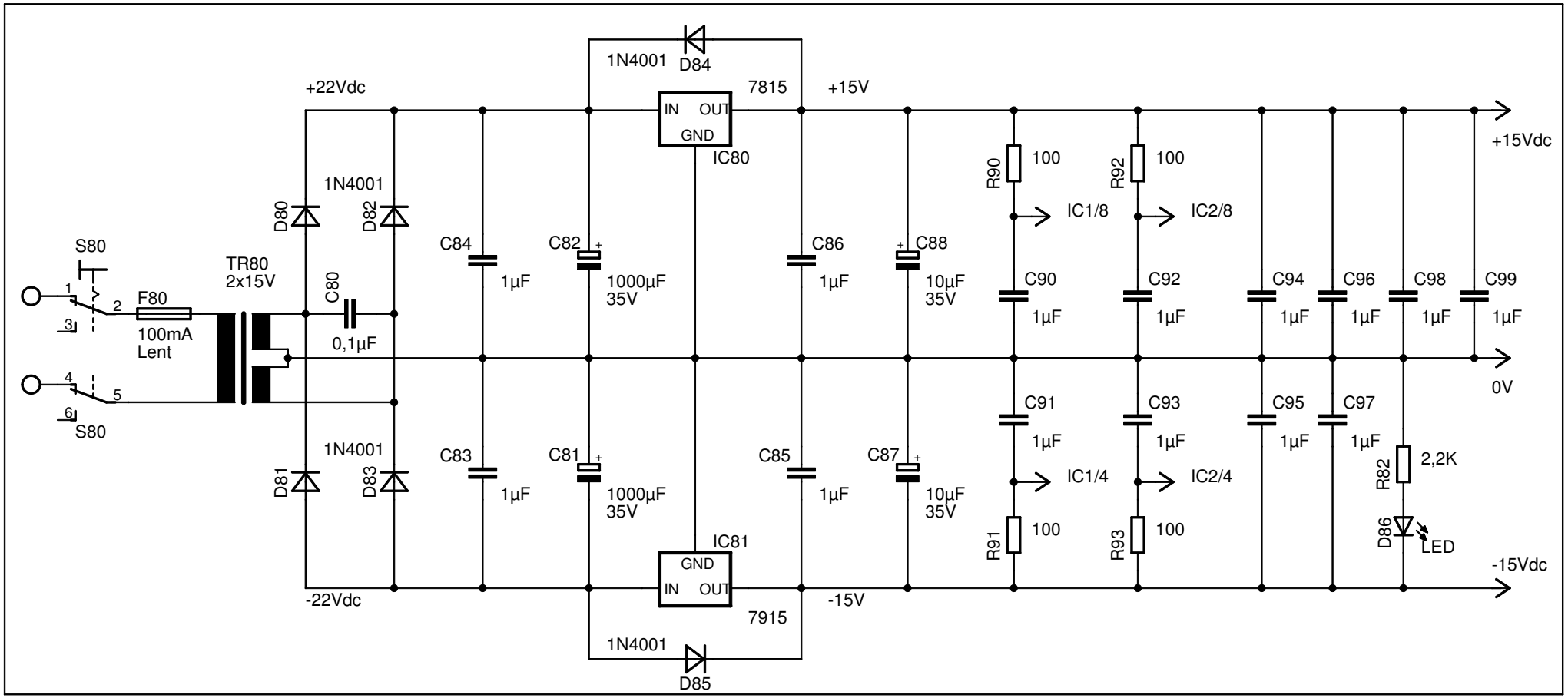
S80
1
2
3
F80
100mA
Lent
4
5
6
S80
TR80
2x15V
+22Vdc
-22Vdc
D80
D81
1N4001
D82
D83
1N4001
C80
0,1µF
C84
1µF
C83
1µF
C82
1000µF
35V
C81
1000µF
35V
1N4001
D84
1N4001
D85
IN
OUT
GND
7815
IC80
IC81
GND
IN
OUT
7915
+15V
-15V
C86
1µF
C85
1µF
C88
10µF
35V
C87
10µF
35V
R90
100
R91
100
R92
100
R93
100
IC1/8
IC2/8
IC1/4
IC2/4
C90
1µF
C91
1µF
C92
1µF
C93
1µF
C94
1µF
C95
1µF
C96
1µF
C97
1µF
C98
1µF
C99
1µF
R82
2,2K
D86
LED
+15Vdc
0V
-15Vdc