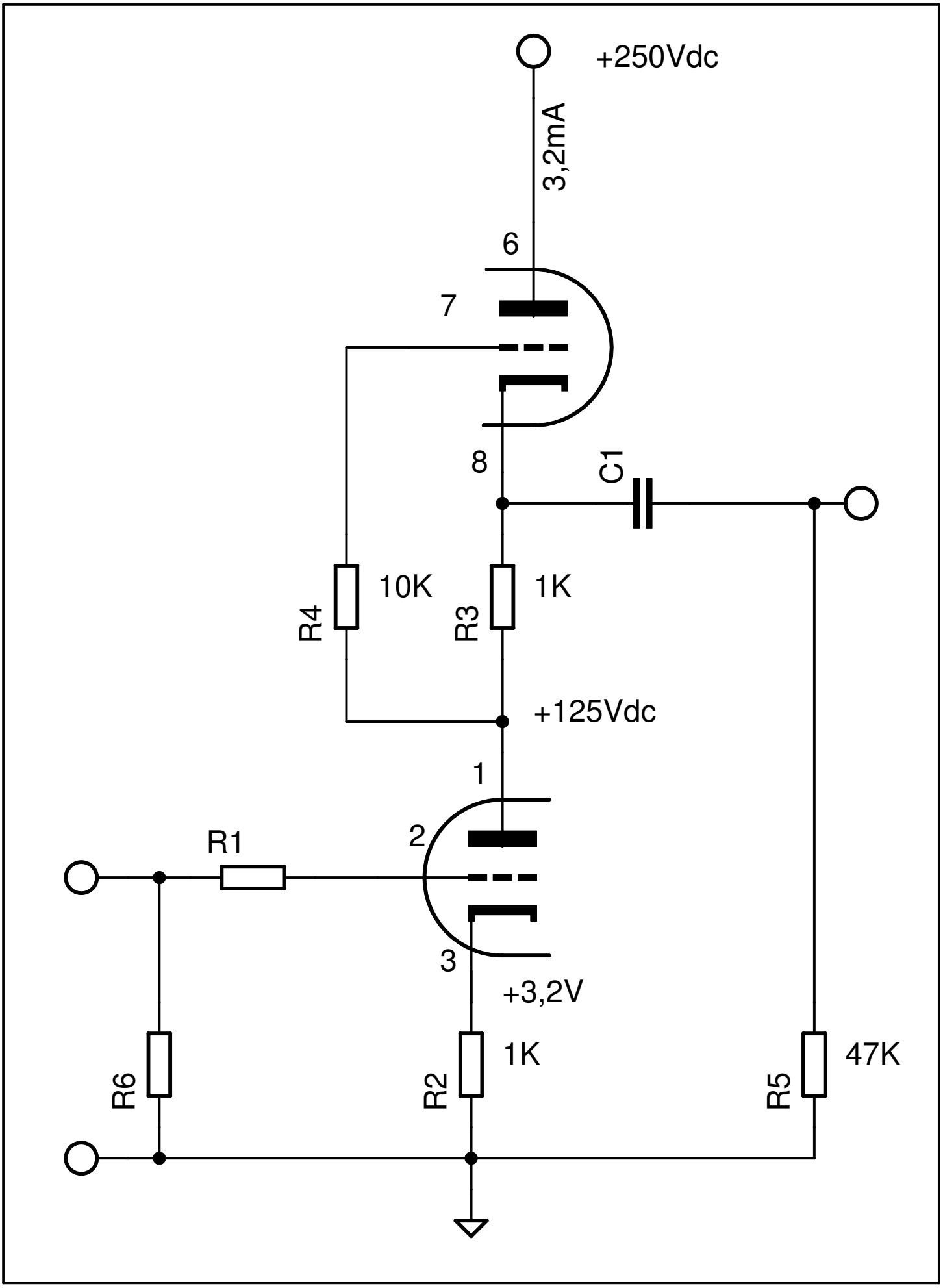
+250Vdc
3,2mA
6
7
8
C1
10K
1K
R4
R3
+125Vdc
1
2
R1
3
+3,2V
1K
47K
R6
R2
R5