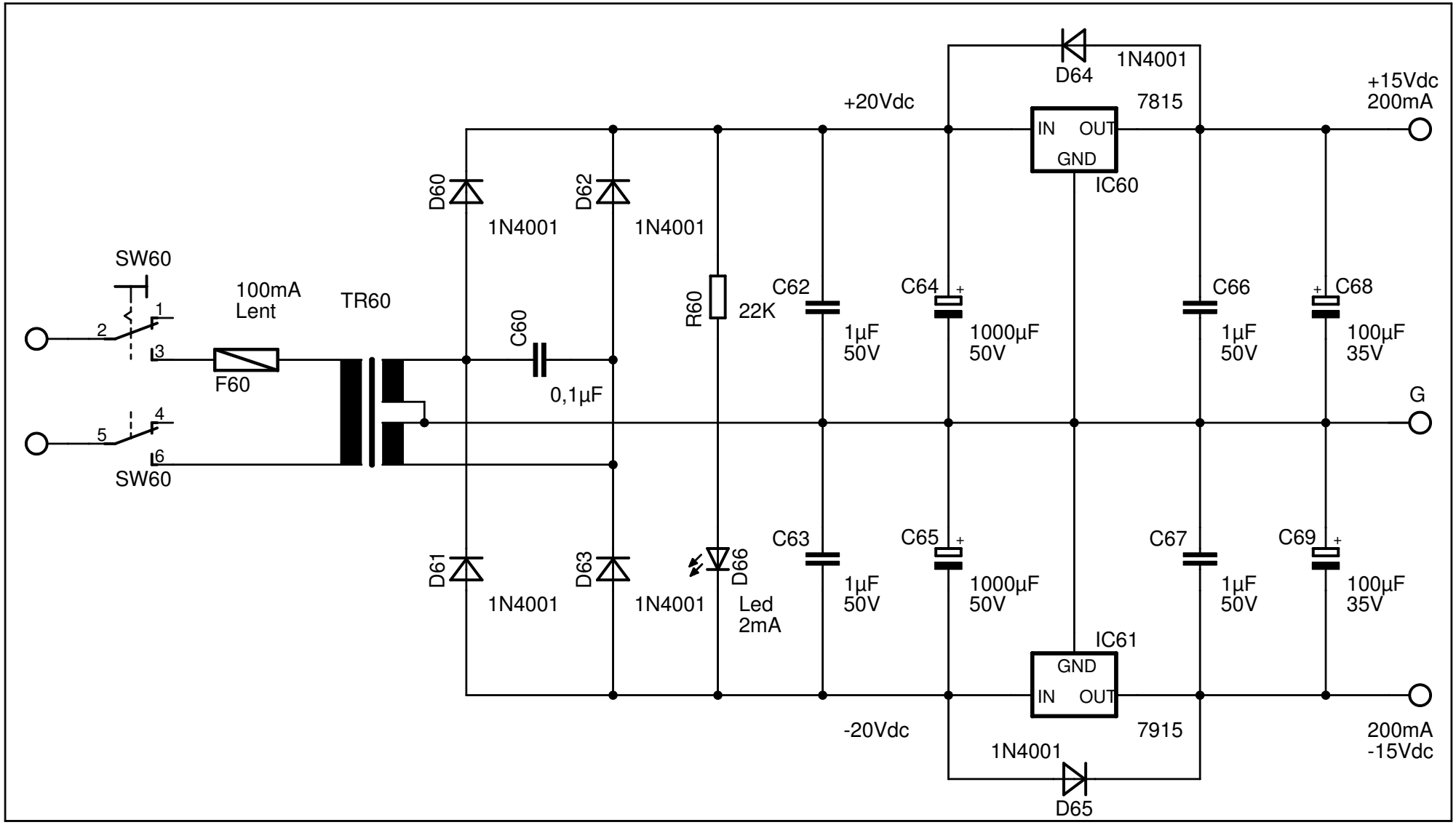

10/01/2007 15:47:11 f=1.50 E:\Program Files Bis\CAD\EAGLE-4.13\projects\AC3 Transistor\AC3 Alimentation.sch (Sheet: 1/1)