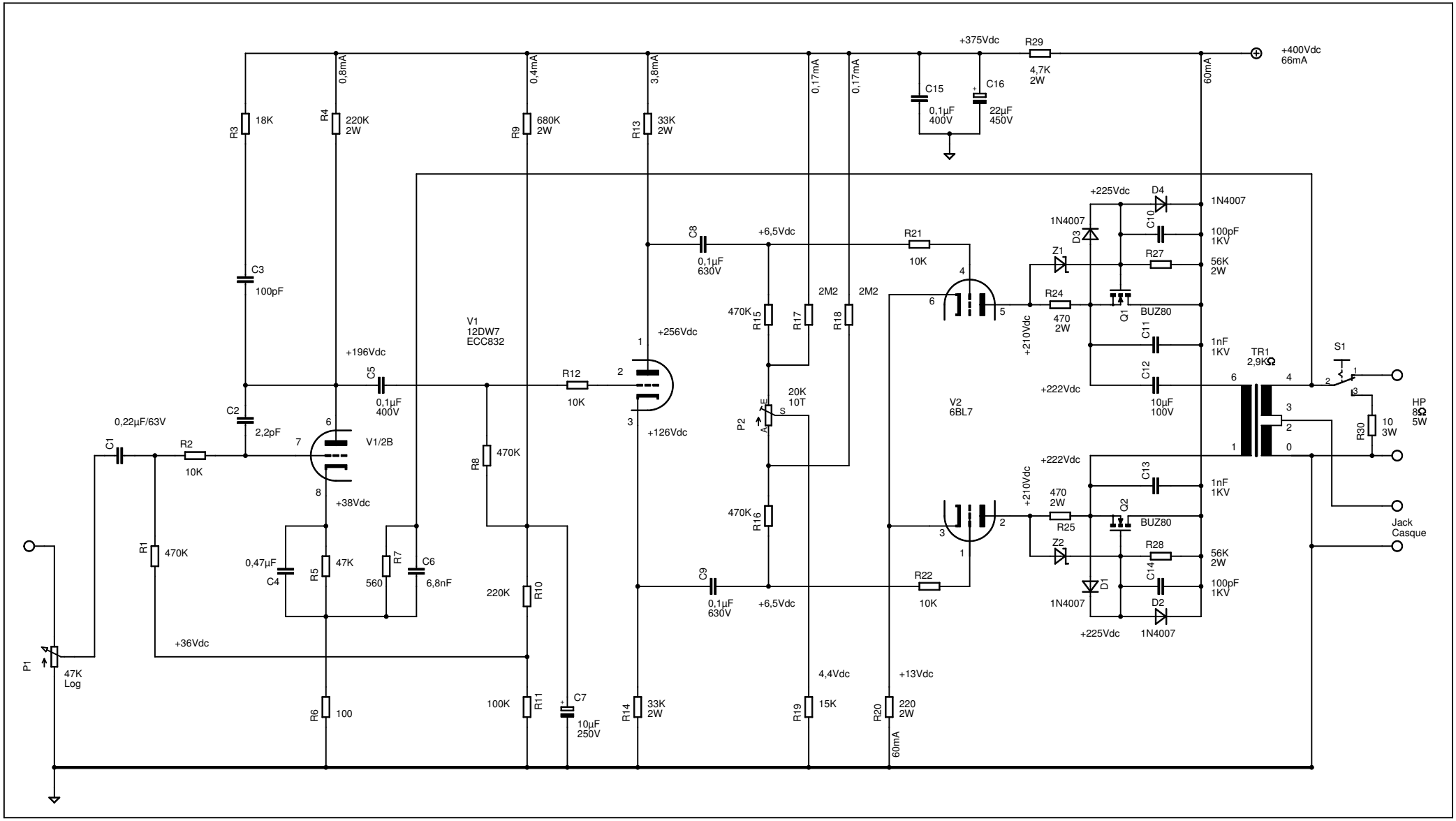

28/04/2008 14:47:41 f=0.75 E:\Program Files Bis\CAD\EAGLE-4.13\projects\A5 6BL7\A3 6BL7 ed15.sch (Sheet: 1/1)