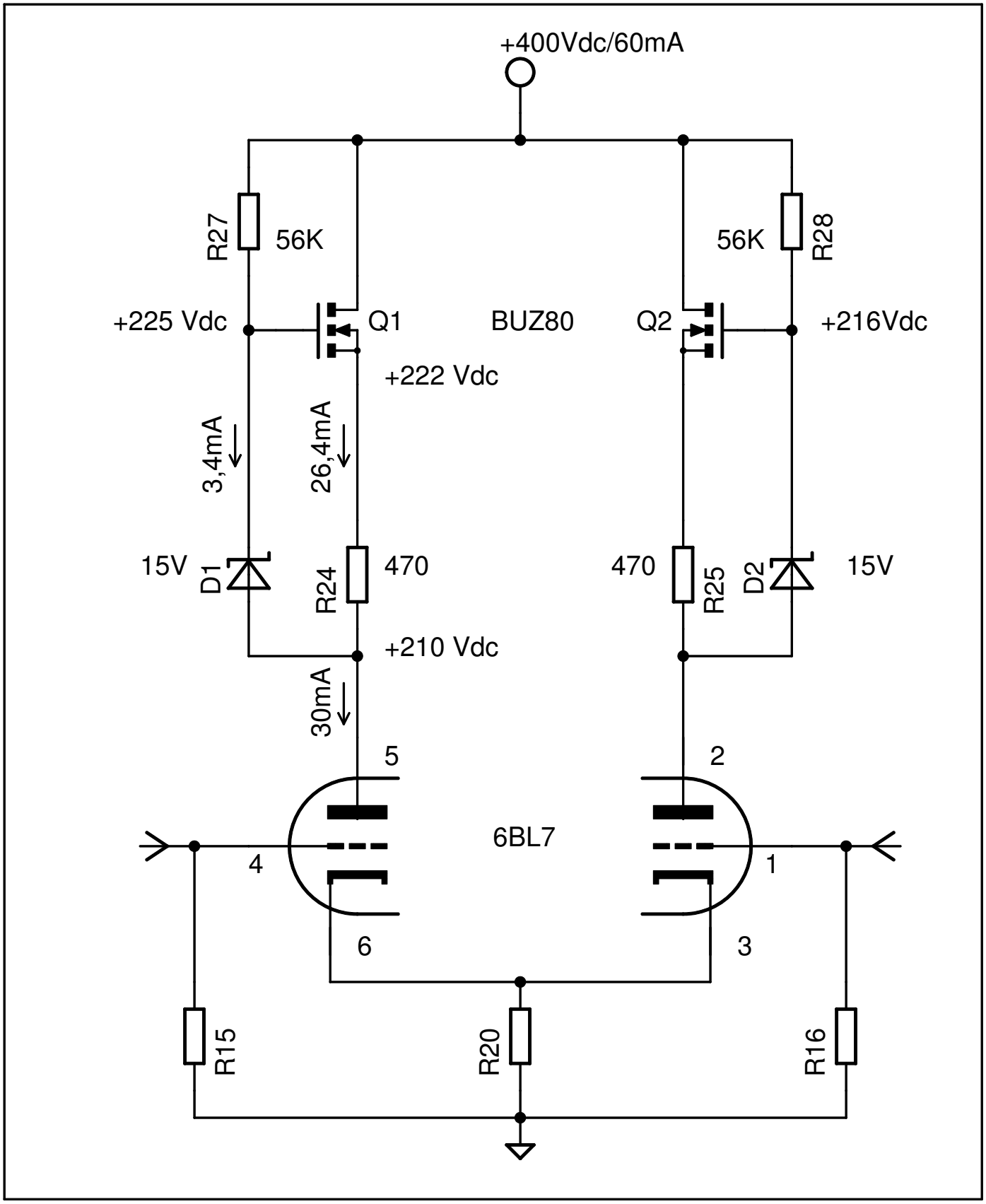
+400Vdc/60mA
R27
56K
56K
R28
+225 Vdc
Q1
BUZ80
Q2
+216Vdc
+222 Vdc
3,4mA
26,4mA
15V
D1
R24
470
470
R25
D2
15V
+210 Vdc
30mA
5
2
6BL7
4
1
6
3
R15
R20
R16