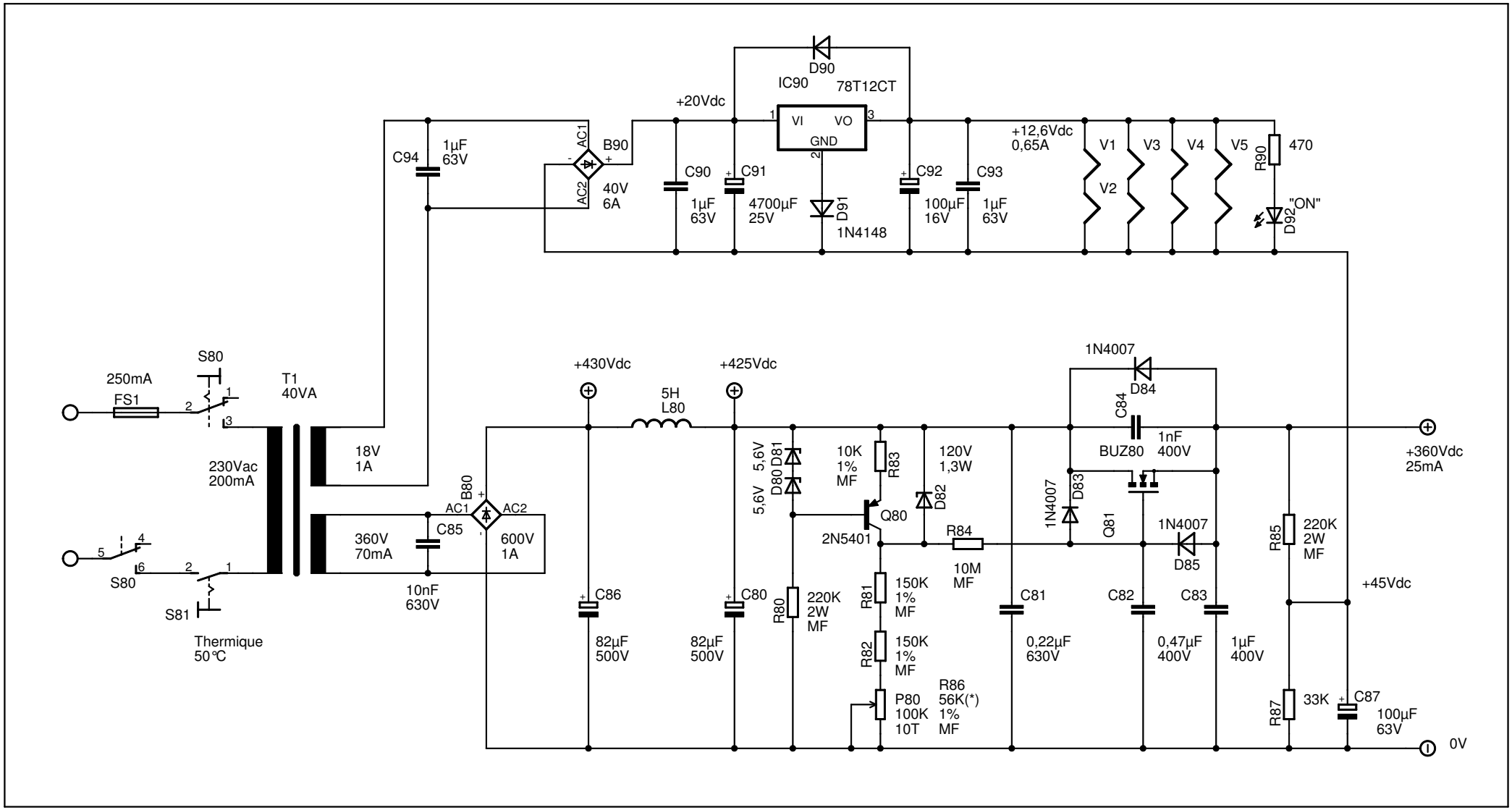
D90
IC90
78T12CT
+20Vdc
VI
VO
GND
C94
1µF
63V
AC1
AC2
B90
40V
6A
C90
1µF
63V
C91
4700µF
25V
D91
1N4148
C92
100µF
16V
C93
1µF
63V
+12,6Vdc
0,65A
V1
V2
V3
V4
V5
R90
470
D92
"ON"
S80
250mA
FS1
T1
40VA
230Vac
200mA
18V
1A
360V
70mA
C85
10nF
630V
B80
600V
1A
S81
Thermique
50°C
+430Vdc
+425Vdc
5H
L80
C86
82µF
500V
C80
82µF
500V
5,6V
D81
D80
R80
220K
2W
MF
10K
1%
MF
R83
Q80
2N5401
120V
1,3W
D82
R84
10M
MF
R81
150K
1%
MF
R82
150K
1%
MF
P80
100K
10T
R86
56K(*)
1%
MF
C81
0,22µF
630V
1N4007
D84
C84
1nF
400V
BUZ80
D83
Q81
1N4007
D85
C82
0,47µF
400V
C83
1µF
400V
R85
220K
2W
MF
R87
33K
C87
100µF
63V
+360Vdc
25mA
+45Vdc
0V