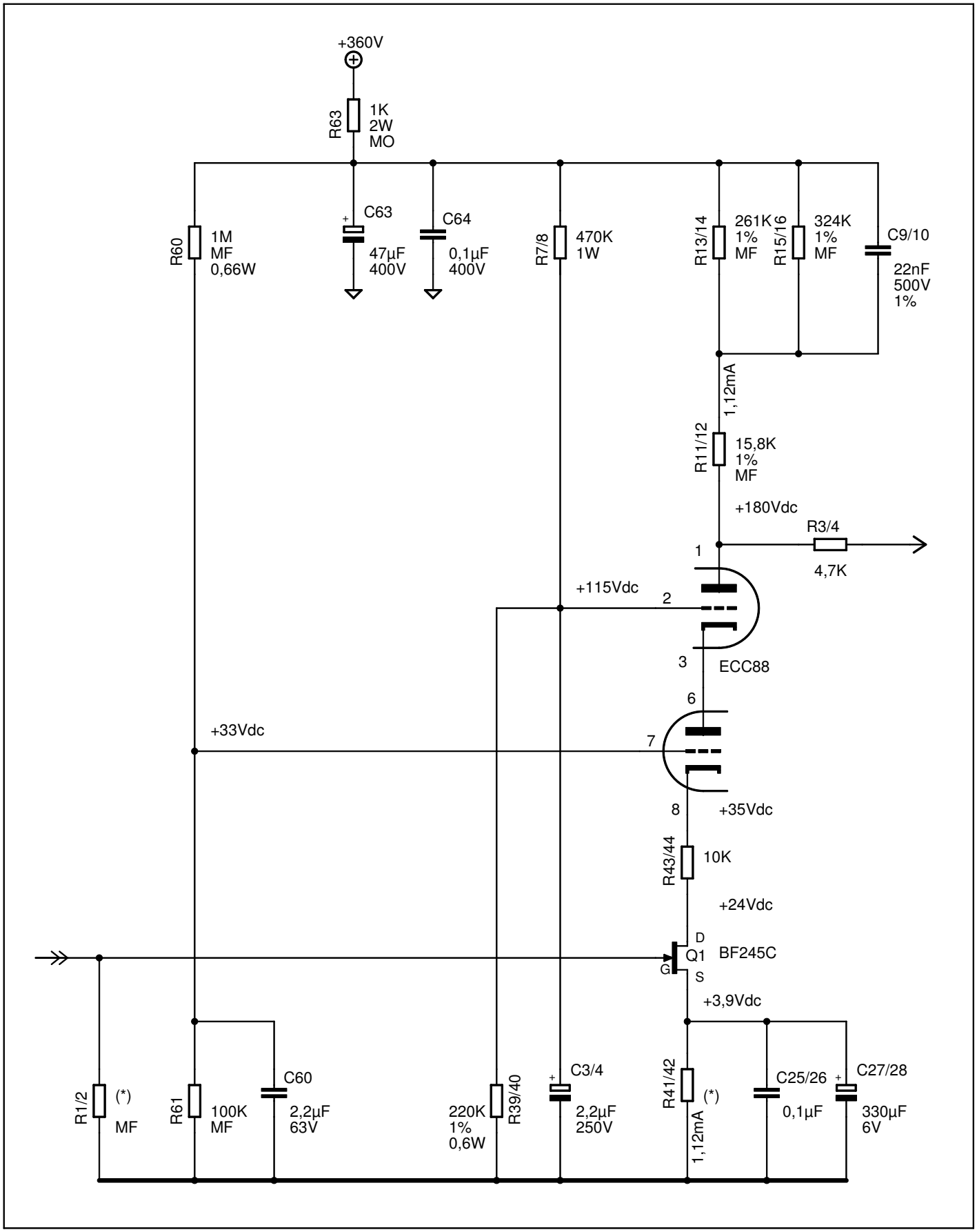
+360V
R63
1K
2W
MO
R60
1M
MF
0,66W
C63
47µF
400V
C64
0,1µF
400V
R7/8
470K
1W
R13/14
261K
1%
MF
R15/16
324K
1%
MF
C9/10
22nF
500V
1%
1,12mA
R11/12
15,8K
1%
MF
+180Vdc
R3/4
4,7K
1
+115Vdc
2
3
ECC88
6
+33Vdc
7
8
+35Vdc
R43/44
10K
+24Vdc
D
Q1
BF245C
G
S
+3,9Vdc
R1/2
(*)
MF
R61
100K
MF
C60
2,2µF
63V
220K
1%
0,6W
R39/40
C3/4
2,2µF
250V
R41/42
(*)
1,12mA
C25/26
0,1µF
C27/28
330µF
6V