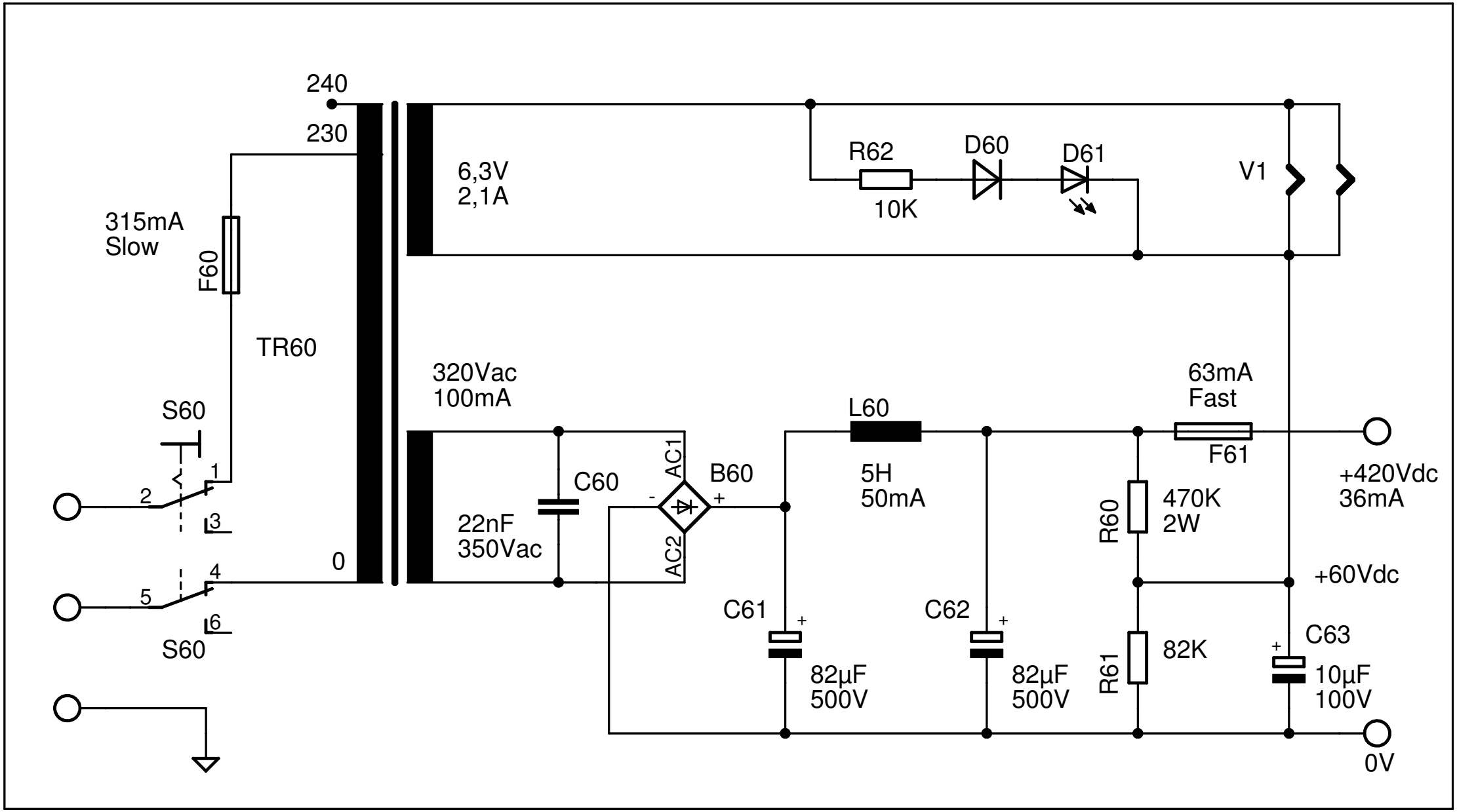
240
230
0
6,3V
2,1A
R62
10K
D60
D61
V1
315mA
Slow
F60
TR60
320Vac
100mA
S60
1
2
3
4
5
6
S60
C60
22nF
350Vac
AC1
AC2
B60
L60
5H
50mA
63mA
Fast
F61
+420Vdc
36mA
R60
470K
2W
+60Vdc
C61
82µF
500V
C62
82µF
500V
R61
82K
C63
10µF
100V
0V