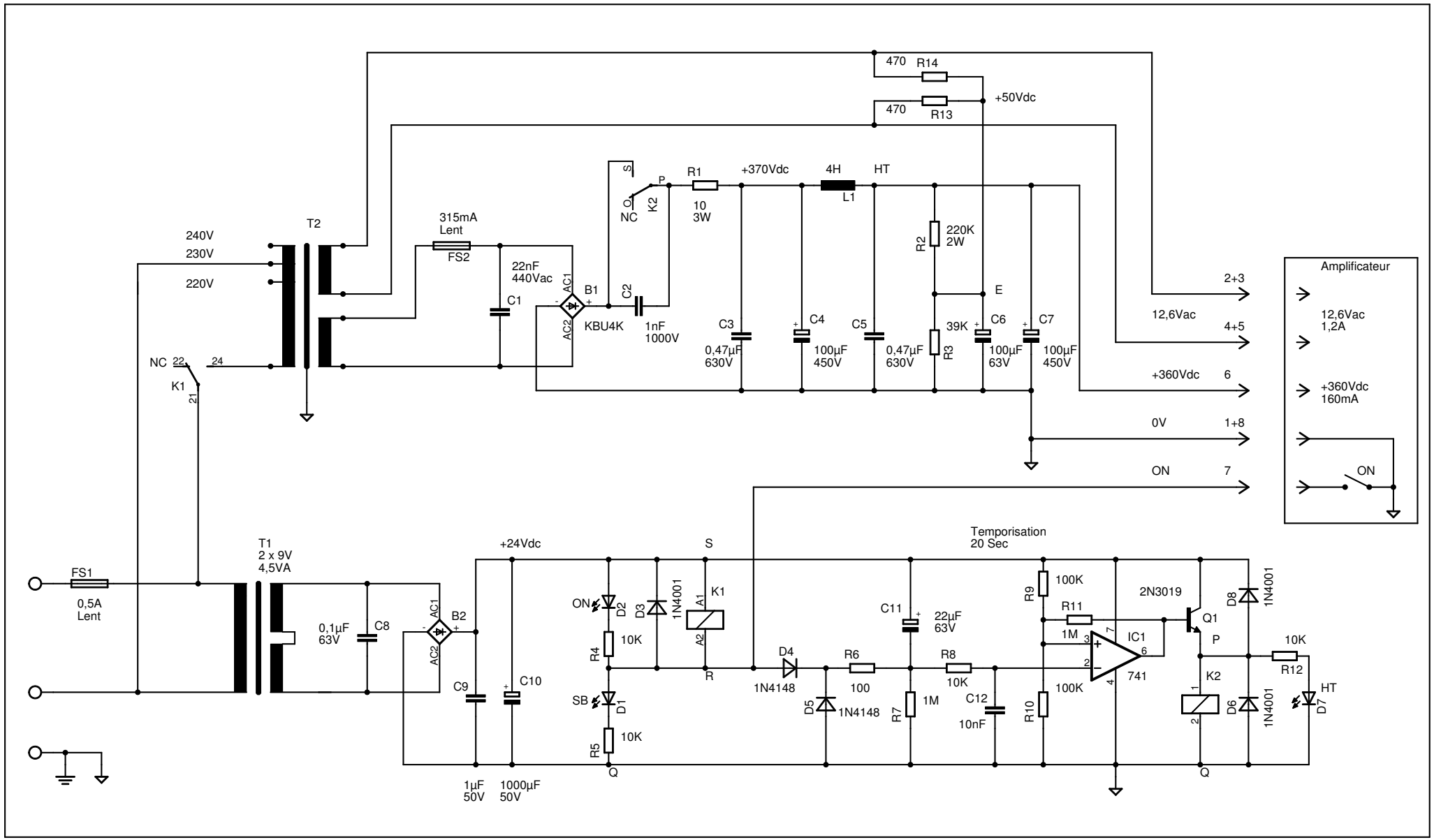

04/09/2006 09:17:55 f=0.90 D:\Program Files Bis\CAD\EAGLE-4.13\projects\A5.1\Alim\A5.1 - Alim HT 6V6GT Unreg ed1.sch (Sheet: 1/1)