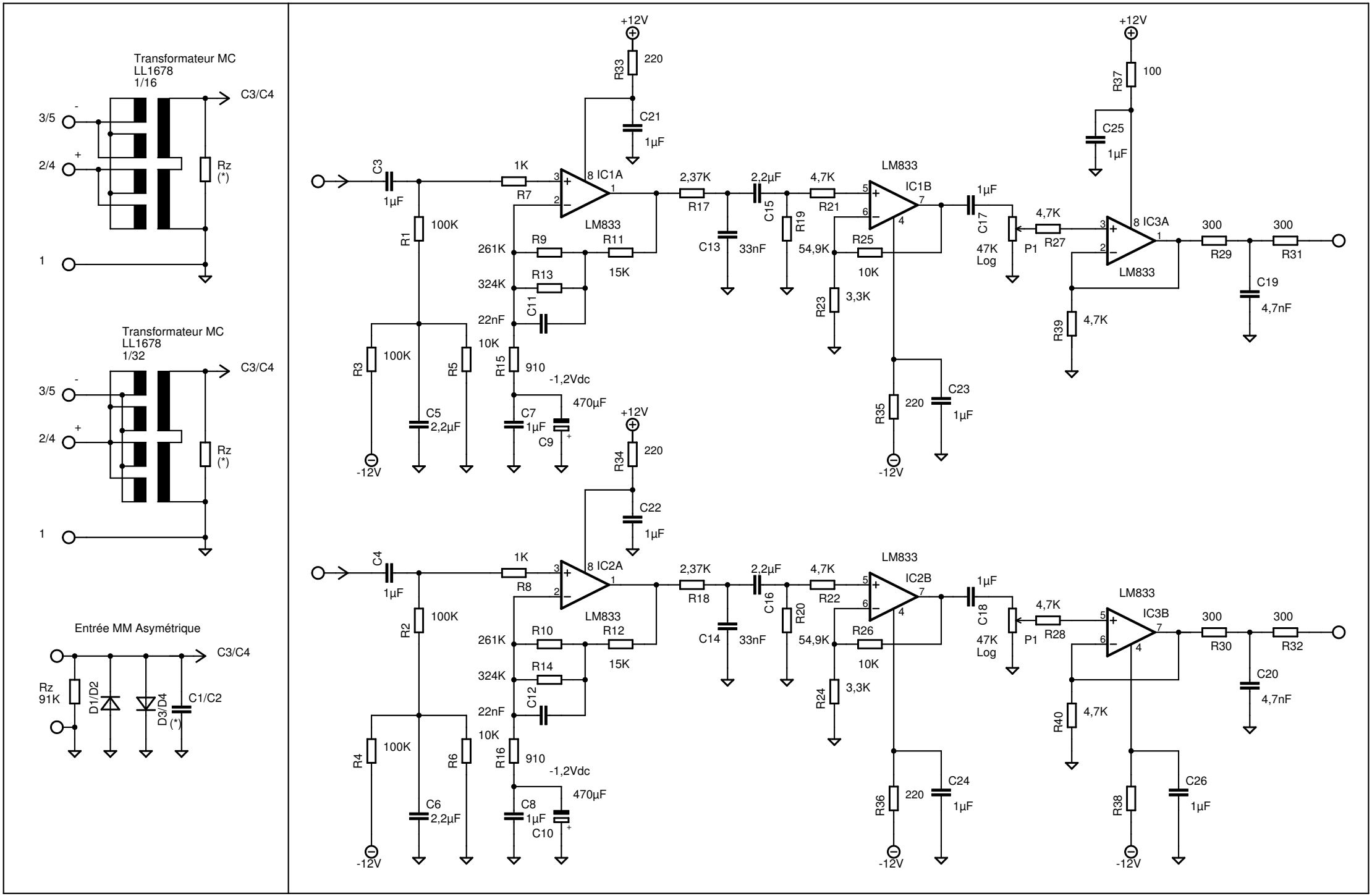

09/09/2006 11:26:40 D:\Program Files Bis\CAD\EAGLE-4.13\projects\RIAA New\RIAA New-ed7.sch (Sheet: 1/1)