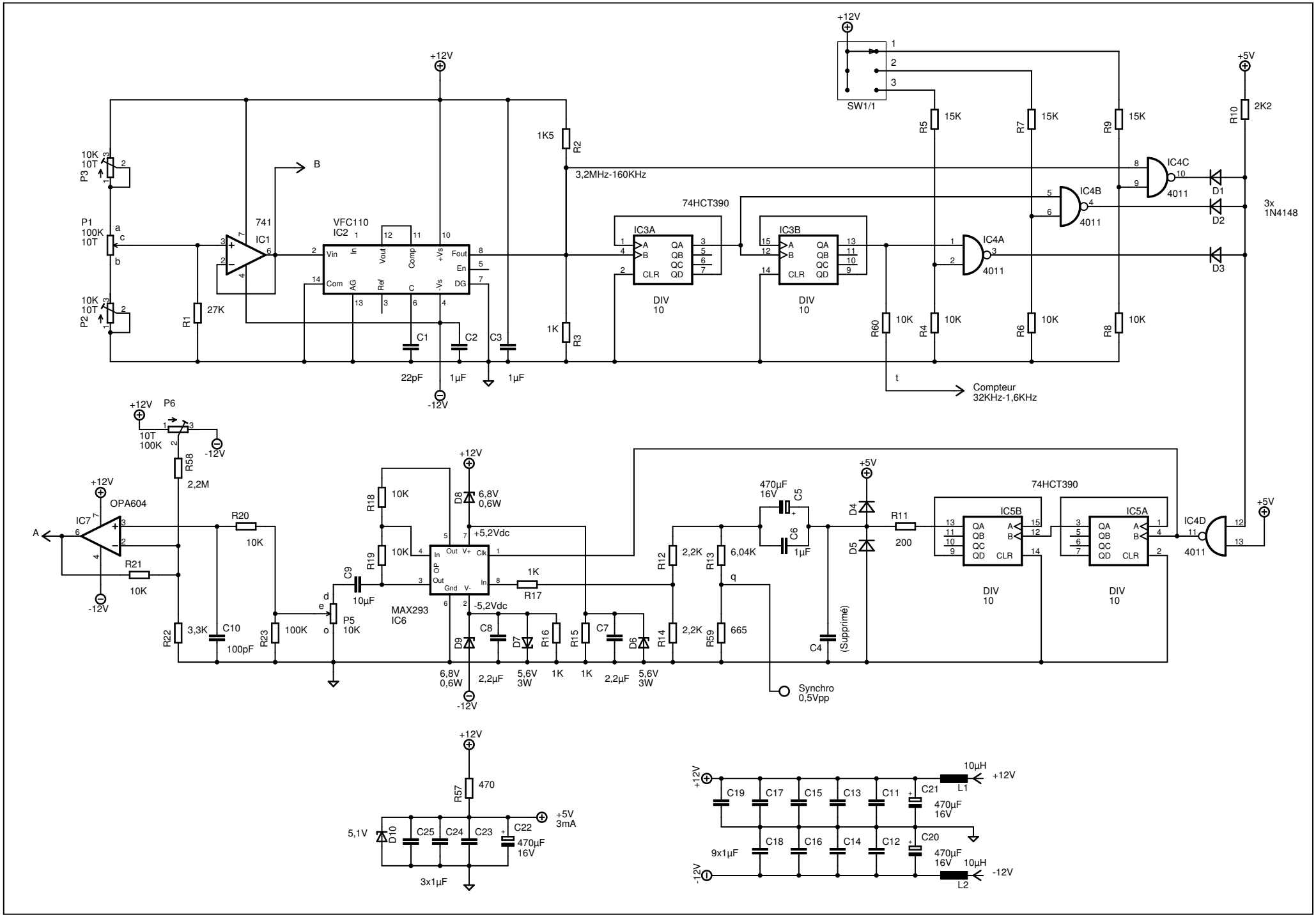


12/10/2005 23:22:26 f=0.79 D:\Program Files Bis\CAD\EAGLE-4.13\projects\Generateur audio\Generateur VCO-LED-2.sch (Sheet: 1/1)