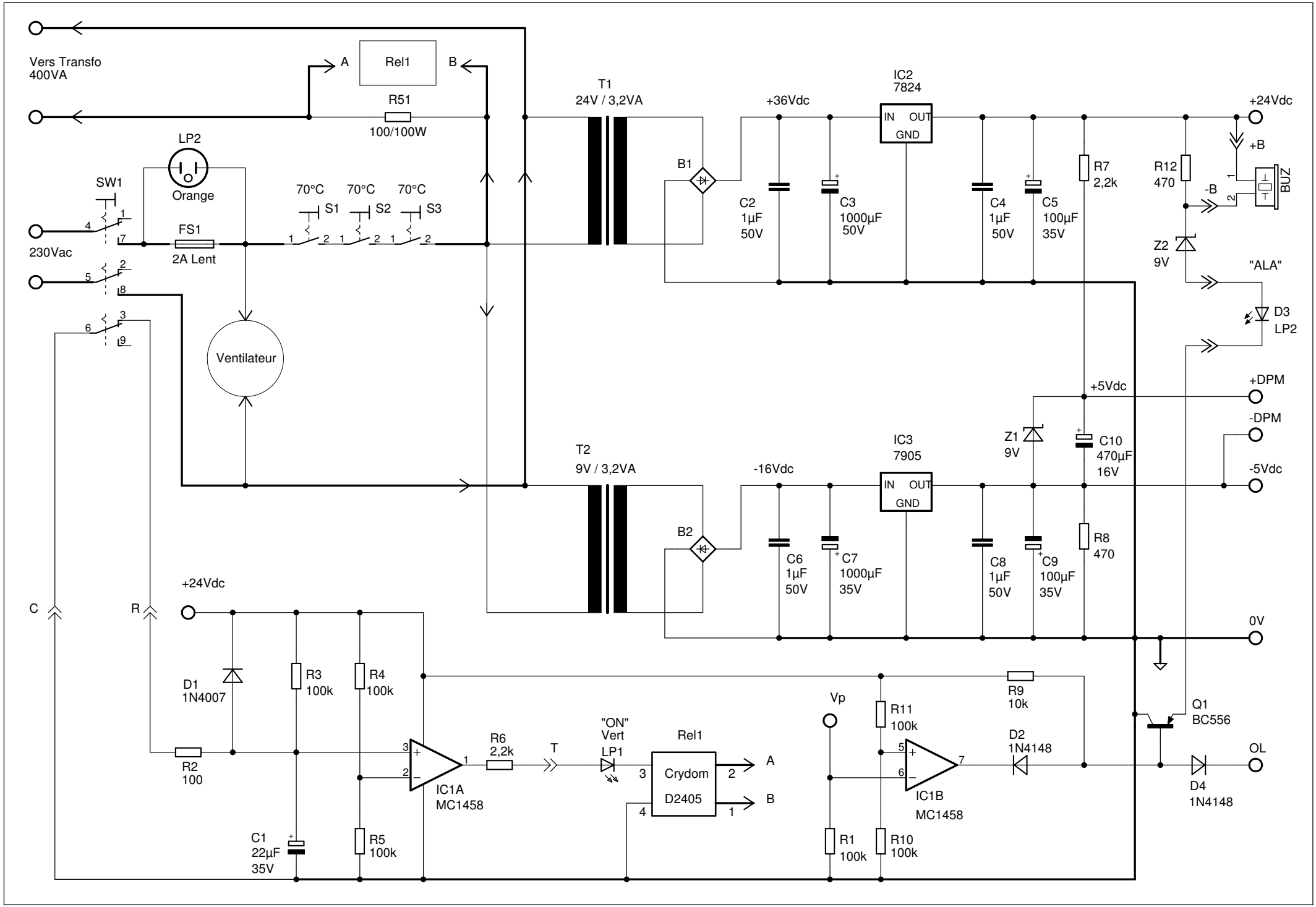
Vers Transfo
400VA
A
Rel1
B
R51
100/100W
LP2
Orange
SW1
230Vac
FS1
2A Lent
70°C
S1
S2
S3
Ventilateur
T1
24V / 3,2VA
B1
+36Vdc
C2
1µF
50V
C3
1000µF
50V
IC2
7824
IN
OUT
GND
C4
1µF
50V
C5
100µF
35V
R7
2,2k
+24Vdc
+B
R12
470
-B
BUZ
Z2
9V
"ALA"
D3
LP2
+5Vdc
+DPM
-DPM
-5Vdc
Z1
9V
C10
470µF
16V
T2
9V / 3,2VA
B2
-16Vdc
IC3
7905
C6
1µF
50V
C7
1000µF
35V
C8
1µF
50V
C9
100µF
35V
R8
470
0V
C
R
+24Vdc
D1
1N4007
R3
100k
R4
100k
R2
100
IC1A
MC1458
R6
2,2k
T
"ON"
Vert
LP1
Rel1
Crydom
D2405
A
B
C1
22µF
35V
R5
100k
Vp
R11
100k
R9
10k
D2
1N4148
IC1B
MC1458
R1
100k
R10
100k
Q1
BC556
OL
D4
1N4148