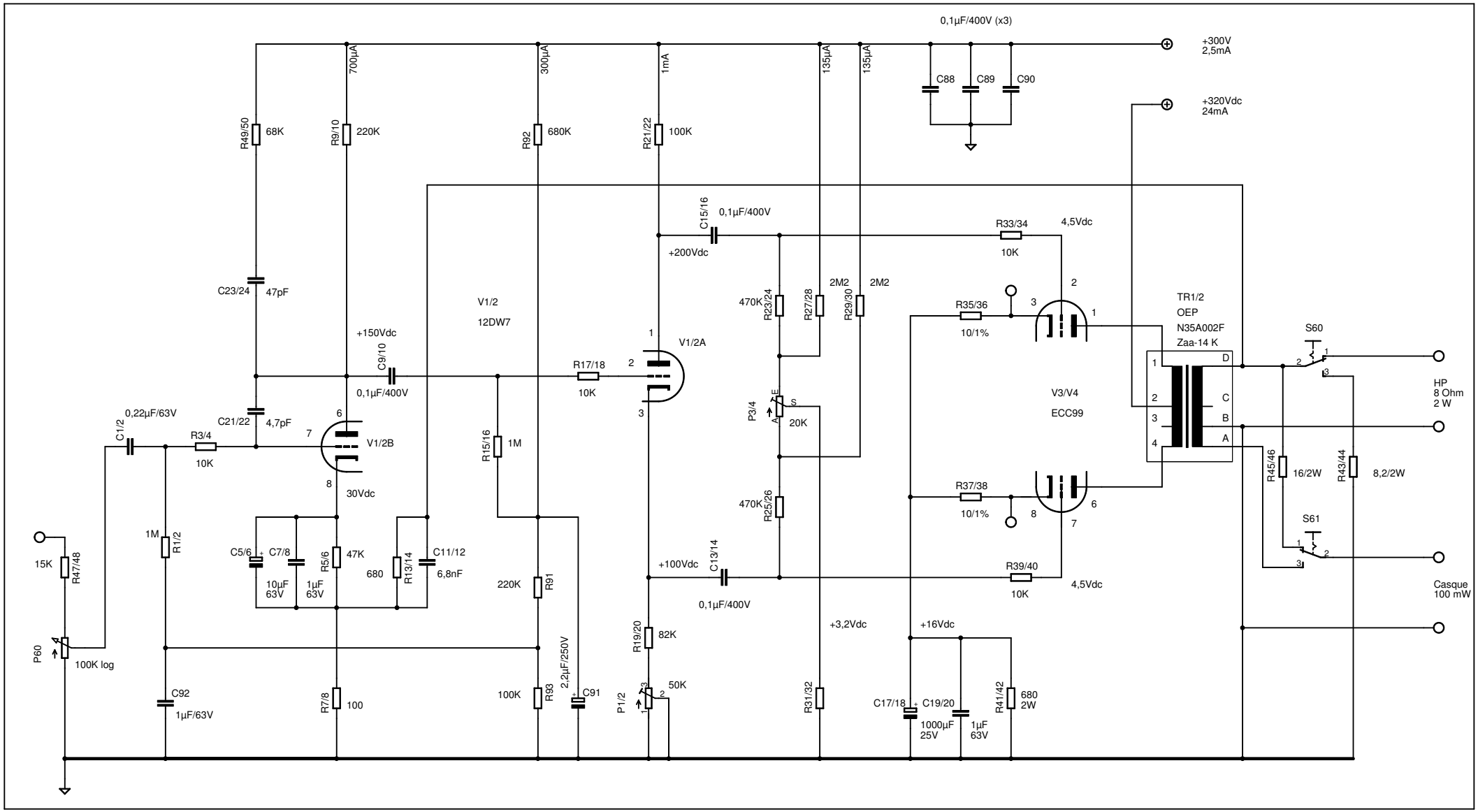
0,1µF/400V (x3)
+300V
2,5mA
+320Vdc
24mA
C88
C89
C90
700µA
300µA
1mA
135µA
135µA
R49/50
68K
R9/10
220K
R92
680K
R21/22
100K
C15/16
0,1µF/400V
+200Vdc
R33/34
10K
4,5Vdc
C23/24
47pF
V1/2
12DW7
470K
R23/24
R27/28
2M2
R29/30
2M2
R35/36
10/1%
TR1/2
OEP
N35A002F
Zaa-14 K
S60
+150Vdc
C9/10
0,1µF/400V
R17/18
10K
V1/2A
P3/4
20K
V3/V4
ECC99
HP
8 Ohm
2 W
0,22µF/63V
C1/2
R3/4
10K
C21/22
4,7pF
V1/2B
30Vdc
R15/16
1M
470K
R25/26
R37/38
10/1%
R45/46
16/2W
R43/44
8,2/2W
S61
1M
R1/2
15K
R47/48
C5/6
10µF
63V
C7/8
1µF
63V
R5/6
47K
680
R13/14
C11/12
6,8nF
+100Vdc
C13/14
0,1µF/400V
R39/40
10K
4,5Vdc
Casque
100 mW
220K
R91
R19/20
82K
+3,2Vdc
+16Vdc
P60
100K log
C92
1µF/63V
R7/8
100
100K
R93
2,2µF/250V
C91
P1/2
50K
R31/32
C17/18
1000µF
25V
C19/20
1µF
63V
R41/42
680
2W