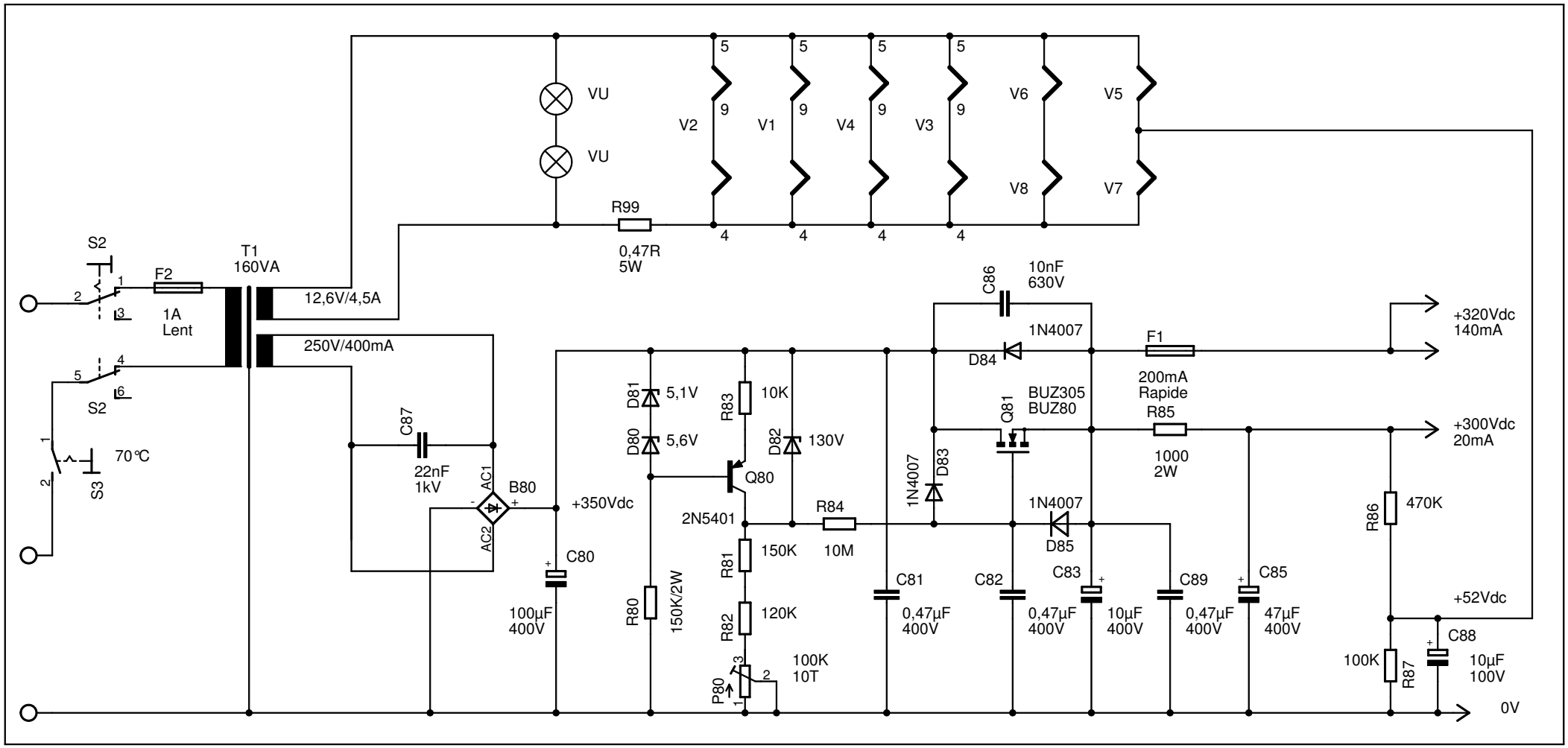

13/11/2007 12:38:57 f=1.10 E:\Program Files Bis\CAD\EAGLE-4.13\projects\A12\A12 Alimentation Ed8.sch (Sheet: 1/1)